Miele

Operating and installation instructions
Heat-pump dryer

Always read the operating instructions before setting up, installing and commissioning the appliance. This prevents both personal injury and damage to the machine.

en-GB

M.-Nr. 12 032 520

Contents

Caring for the environment 6

Warning and Safety instructions 7

Operating the tumble dryer 19
Control panel 19
Symbols on the control panel 20
Symbols on the display 21
Sensor controls and touch display with sensor controls 22
Main menu 22
Examples of how to operate the appliance 23
Selection list 23
Easy selection 23
Setting numerical values 23
Exiting a sub-menu 23

Initial commissioning 24
Switch on the tumble dryer 24
Setting the language 24
Reference to external appliances 25
Setting the display brightness 25
Confirming the time request 25
Setting the time 25
Setting up a payment system 26
Completing the commissioning process 26

1. Notes on correct laundry care 27
Washing 27
Drying 27
Understanding the care label symbols 27

2. Load the tumble dryer 28

3. Selecting a programme 29
Switch on the tumble dryer 29
Selecting a programme 29
Selecting the duration (timed programmes) 29

4. Selecting programme settings 30
Selecting extra options 30
Gentle tumble 30
Anti-crease 30
Selecting delay start 31

5. Starting the programme 32
Starting the programme 32

6. End of programme – unloading the drum 33
End of programme 33
Unloading the drum 33
Observe any maintenance notes 33

Programme overview 34

Changing the programme sequence 36
Changing a programme once it has started 36
Cancelling a programme 36
Reselecting a cancelled programme 36
Adding laundry 36

Fragrance flacon 37
Inserting a fragrance flacon 37
Opening the fragrance flacon 39
Closing the fragrance flacon 39
Removing/replacing the fragrance flacon 40

Cleaning and care 41
When to clean 41
1. When to clean the fluff filter 41
2. When to clean the filter in the plinth 42
3. When to clean the grille in the bottom right/heat exchanger for heat dissipation 43
Cleaning the fluff filters 43
Removing the fragrance flacon 43
Removing visible fluff 43
Cleaning the fluff filters and air flow openings thoroughly 44
Filter in the plinth 46
Removing the fluff filter 46
Cleaning the fluff filters with water 47
Replacing the plinth filter 47
Cleaning the filter insert (in the plinth) 49
Removing the filter insert 49
Check the cooling fins on the heat exchanger 50
Refitting the filter insert (in the plinth) 51
Refitting the fluff filter in the plinth 51
Cleaning and closing the fluff filter flap 52

Contents

Cleaning the bottom right grille/heat exchanger 53
Removing the grille 53
Cleaning the cooling fins 54
Replacing the grille 54
Cleaning the tumble dryer 55

Problem solving guide 56
The display indicates the following messages or faults 56
Unsatisfactory drying results 60
The drying cycle duration is very long 61
General problems with the tumble dryer 62
Reactivating the plinth filter 63

Service 64
Contact in the event of a fault 64
Optional accessories 64

Installation 65
Front view 65
Rear view 66
Locations 67
Side view 67
Steel plinth 67
View from above 67
Washer-dryer stack 67
Transporting the tumble dryer to its installation site 68
Installation 69
Downtime after installation 69
Levelling the tumble dryer 69
Room ventilation 70
External control equipment 70
Hose for external drainage of condensed water 71
Electrical connection 73

Consumption data 75

Technical data 76
Data sheet for household tumble driers 77
EU Conformity declaration 79
UK Conformity declaration 79

Supervisor level ... 80
Opening Supervisor level ... 80
Access via code ... 80
Change code ... 80
Demo programme ... 80
Opening the supervisor level ... 81
Exiting the supervisor level ... 81
Language ... 82
Brightness ... 82
Clock display ... 82
Finish tone volume ... 82
Keypad tone volume ... 82
Welcome tone volume ... 82
Fault alarm ... 83
Anti-crease ... 83
Further cooling ... 83
Cooling down temperature ... 83
“Display” switch-off status ... 84
Delay start ... 84
Programme name ... 84
Visibility parameters ... 85
Drying levels Cottons ... 85
Drying level Minimum iron ... 85
Drying level Machine iron ... 85
Clean the airways ... 85
COM mod. selection ... 86
Availability of Miele digital products ... 86
WiFi / LAN ... 86
Remote ... 87
Remote update ... 87
Legal information ... 88
Payment system ... 89
Setting for payment systems ... 89
Feedback signal to pay system ... 89
Payment system lock ... 90
Delete paid signal ... 90
Debounce time ... 90
Payment system overriding time ... 90
Duration Cool air ... 91
Duration Warm air ... 91
FOC programmes ... 91

Caring for the environment

Disposing of the packaging material

The packaging material is used for handling and protects the appliance from transport damage. The packaging material used is selected from materials which are environmentally friendly for disposal and can generally be recycled.

Recycling the packaging material reduces the use of raw materials. Use material-specific collection points for valuable materials and take advantage of return options. Your Miele dealer will take the packaging material away.

Disposing of your old appliance

Electrical and electronic appliances contain many valuable materials. They also contain certain materials, compounds and components which were essential for their correct functioning and safety. These could be hazardous to human health and to the environment if disposed of with household waste or if handled incorrectly. Please do not, therefore, dispose of your old appliance with household waste.

Instead, please make use of officially designated collection and disposal points to dispose of and recycle electrical and electronic appliances in your local community, with your dealer or with Miele, free of charge. By law, you are solely responsible for deleting any personal data from the old appliance prior to disposal. You are legally obliged to remove any old batteries which are not securely enclosed by the appliance and to remove any lamps without destroying them, where this is possible. These must be taken to a suitable collection point where they can be handed in free of charge. Please ensure that your old appliance poses no risk to children while being stored for disposal.

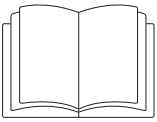

▶ It is essential to read these instructions.

This tumble dryer complies with all current local and national safety requirements. However, inappropriate use can lead to personal injury and damage to property.

Read the operating instructions carefully before using the tumble dryer. They contain important information on safety, installation, use and maintenance. This prevents both personal injury and damage to the tumble dryer.

In accordance with standard IEC 60335-1, Miele expressly and strongly advises that you read and follow the instructions in the chapter on installing the tumble dryer as well as the safety instructions and warnings.

Miele cannot be held liable for damage caused by non-compliance with these instructions.

Keep these operating instructions in a safe place and pass them on to any future owner.

When instructing other people how to use the tumble dryer, they must be made aware of these safety and warning instructions.

Correct application

▶ This tumble dryer is only intended for drying fabrics which have been washed in a water solution, and marked on the manufacturer's care label as being suitable for tumble drying. “Dry cleaning kits” for freshening up garments in a tumble dryer are increasingly available on the market. If using, do so at your own risk, and follow the instructions provided on the packaging. Any other applications may be dangerous. Miele cannot be held liable for damage resulting from incorrect or improper use or operation.

▶ This tumble dryer may also be operated in public areas.

▶ The tumble dryer is not intended for outdoor use.

▶ This appliance can only be used by people with reduced physical, sensory or mental capabilities, or lack of experience or knowledge, if they are supervised whilst using it or have been shown how to use it in a safe way and understand and recognise the consequences of incorrect operation.

▶ Children under 8 years of age must be kept away from the tumble dryer unless they are constantly supervised.

▶ Children 8 years and older may only use the tumble dryer unsupervised if they have been shown how to use it safely and recognise and understand the consequences of incorrect operation.

▶ Children must not be allowed to clean or maintain the tumble dryer unsupervised.

▶ Please supervise children in the vicinity of the tumble dryer and do not let them play with it.

Technical safety

▶ Before setting up the tumble dryer, check it for any externally visible damage.
Do not install or use a damaged tumble dryer.

▶ Do not make any alterations to the tumble dryer, unless authorised to do so by Miele.

▶ Temporary or permanent operation on an autonomous power supply system or a power supply system that is not synchronised with the mains power supply (e.g. island networks, back-up systems) is possible. A prerequisite for operation is that the power supply system complies with the specifications of EN 50160 or an equivalent standard.
The function and operation of the protective measures provided in the domestic electrical installation and in this Miele product must also be maintained in isolated operation or in operation that is not synchronised with the mains power supply, or these measures must be replaced by equivalent measures in the installation. As described, for example, in the current version of BS OHSAS 18001–2 ISO 45001.

▶ Do not connect the tumble dryer to the mains electricity supply by an extension lead. Extension leads are a fire hazard and do not guarantee the required safety of the tumble dryer.

▶ If the electrical connection cable is faulty it must always be replaced by a Miele authorised service technician to protect the user from danger.

▶ The electrical safety of this tumble dryer can only be guaranteed when correctly earthed. It is essential that this standard safety requirement is met. If in any doubt, please have the on-site wiring system inspected by a qualified electrician. Miele cannot be held liable for the consequences of an inadequate earthing system (e.g. electric shock).

▶ Unauthorised repairs could result in unforeseen dangers for the user, for which Miele cannot accept liability. Repairs should only be undertaken by a Miele approved service technician, otherwise any subsequent damage will not be covered by the warranty. Ensure current is not supplied to the tumble dryer until after maintenance or repair work has been carried out.

▶ Faulty components must only be replaced by genuine Miele original spare parts. The manufacturer can only guarantee the safety of the appliance when Miele replacement parts are used.

▶ To ensure the correct performance of the tumble dryer and to prevent the risk of faults and fire, it is important to carry out maintenance on a regular basis.

▶ In the event of a fault or for cleaning purposes, the tumble dryer is only completely isolated from the electricity supply when:

- it is switched off at the wall socket or the plug is withdrawn, or
- it is switched off at the mains, or the mains fuse is disconnected
- the screw-out fuse is removed (in countries where this is applicable), or it is switched off at the isolator switch.

See “Installation - Electrical connection”.

▶ This appliance must not be used in a non-stationary location (e.g. on a ship).

▶ See “Installation” and “Technical data”.

▶ The accessibility of the plug must be always ensured, in order to separate the tumble dryer from the mains. All electrical work should be carried out only by a suitably qualified and competent person, in strict accordance with national and local safety regulations.

▶ If the appliance is hard wired, adequate provision must be made on site to switch off all poles to disconnect the tumble dryer from the electrical supply.

▶ Do not block the gap between the bottom of the tumble dryer and the floor with plinth facings, deep pile carpet etc. This would hinder a sufficient flow of air to the dryer.

▶ Do not install a lockable door, a sliding door or a door which is hinged in the opposite direction to the dryer door.

▶ This tumble dryer is supplied with a special lamp to cope with particular conditions (e.g. relating to temperature, moisture, chemical resistance, abrasion resistance and vibration). This special lamp must only be used for the purpose for which it is intended. It is not suitable for room lighting. Replacement lamps may only be fitted by a Miele authorised person or by Miele Service.

▶ Information on the heat pump and refrigerant

- This tumble dryer uses refrigerant gas which is not flammable and not explosive.
- The humming noises caused by the heat pump during the drying process are normal. They do not impair the efficient functioning of the tumble dryer.

⚠ Damage to the tumble dryer by switching it on too soon.

This can damage the heat pump.

After setting up the tumble dryer, wait for at least one hour before switching it on.

- This tumble dryer contains fluorinated greenhouse gases (F-Gas). They are hermetically sealed.
  Designation of refrigerant: R134a
  Amount of refrigerant: 0.61 kg
  Global warming potential of refrigerant: 1430 kg CO_2 e
  Global warming potential of appliance: 872 kg CO_2 e

Correct use

▶ The maximum load for this tumble dryer is 7 kg (dry weight).The maximum recommended loads for individual programmes are given in the Programme chart.

▶ Do not lean on the door. Otherwise, the tumble dryer may tip over, causing injury to yourself or others.

▶ Always close the door after use. This way you will avoid the danger of:

- children climbing onto or into the dryer or hiding things in it.
- pets or other small animals climbing into it.

▶ Do not use a pressure washer or hose to clean the tumble dryer.

▶ Keep the room where the tumble dryer is located free from dust and fluff. If the air that is taken into the machine contains dirt particles, this can cause blockages. A fault may then occur and there is a risk of fire.

▶ The tumble dryer must not be used:

- without the fluff filters in place or without the filter in the plinth.
- without the bottom right grille fitted.
- if the fluff filters or the filter in the plinth are damaged in any way. In case of damage, the fluff filters and plinth filter must be replaced immediately.

A damaged filter would cause an excessive build-up of fluff which in turn would cause a tumble dryer fault.

▶ To ensure problem-free operation of the tumble dryer:

- Remove the fluff from the fluff filter surfaces after every drying cycle.
- In addition, the fluff filters, filter surfaces, the grille at the bottom right and the air passages must be cleaned when prompted by the display.

▶ Do not install the tumble dryer in a room where there is a risk of frost occurring. At temperatures around freezing point the tumble dryer may not be able to operate properly. There is a risk of damage if the condensed water is allowed to freeze in the pump or hoses. The ambient room temperature should be between 2°C and 35°C.

▶ If the water is drained externally through the drain hose instead of being collected in the condensed water container,
make sure the drain hose is securely attached if you hang it in a sink or basin to avoid the hose slipping and the water causing damage.

▶ Condensed water is not drinking water.
It can cause health problems in both people and animals if consumed.

▶ To prevent the risk of fire, the following textiles must not be dried in this tumble dryer:

- items which have not been washed.
- Items, such as workwear, which have not been thoroughly cleaned and which are still soiled with grease, oil or other deposits (such as cosmetics, lotions etc). If items have not been thoroughly cleaned there is a danger that these might ignite when heated, even after they have been removed from the dryer at the end of the programme.
- Items that have been soiled with substances such as acetone, petrol, kerosene, stain removers, turpentine, waxes, wax removers and other chemicals (e.g. mops and floor cloths) should be washed in hot water with extra detergent before being dried in the tumble dryer.
- Items which have been splashed with hair lacquer, hair spray, nail varnish remover or similar substances.

When washing very heavily soiled items ensure that you use sufficient detergent and select a high temperature. If in doubt wash several times before drying.

▶ Remove all items from pockets (e.g. lighters, matches).

▶ In many programmes, the heating phase is followed by a cooling down phase to ensure that the items are not too hot to handle when you remove them (this also avoids the danger of the laundry self-igniting). The programme is not finished until the cooling down phase is complete. Ensure that you always wait until the end of the programme before removing the laundry.

▶ Fire hazard.
This tumble dryer must not be connected to a controllable socket (e.g. a timer or a peak-load switch-off device).
The tumble dryer may only be operated with a peak-load device if this is connected to the tumble dryer via the Miele XCI box and the relevant settings have been configured on the tumble dryer.
There is a risk of the laundry igniting itself if the drying programme is cancelled before the cooling phase has finished.

▶ To prevent the risk of fire, the following textiles must not be dried in this tumble dryer:

- items which have been cleaned using chemicals (e.g. professional dry-cleaning agents).
- fabrics which contain a large proportion of rubber, foam rubber or rubber-like materials. For example, products made from latex foam rubber, shower caps, waterproof textiles, rubberised articles and items of clothing and pillows with foam rubber filling.
- Fabrics which contain damaged padding or fillings (e.g. pillows, jackets). When damaged, the filling can get out with the risk of it igniting in the dryer.

▶ The programme ends when the cooling phase starts. Many programmes are followed by the cooling phase to ensure that the items are not too hot to handle when you remove them (this also reduces the risk of the laundry self-igniting).
Always remove all laundry as soon as the programme has finished.

▶ Fabric conditioner and similar products must be used according to the instructions on the manufacturer's packaging.

▶ Benzine, petrol, paraffin, or any easily flammable liquid must not be stored or used near the machine. Danger of explosion.

▶ Do not expose the dryer to air which is contaminated with vapour of chlorine, fluorine or other solvents. Danger of fire.

▶ For tumble dryers with stainless steel surfaces:
The stainless steel surfaces must not come into contact with liquid cleaning and disinfecting agents which contain chlorine or sodium hypochlorite. These agents can have a corrosive effect on stainless steel.
Aggressive vapours containing chlorine can also be corrosive.
Do not store containers of these agents near the tumble dryer.

Using a fragrance flacon (optional accessory)

▶ Only ever use original Miele fragrance flacons.

▶ The fragrance flacon must be stored in its packaging so please make sure you retain this.

▶ Make sure that you always keep the fragrance flacon or the fluff filter with the flacon inserted in it in a horizontal position when carrying, and do not tip or place it down on any surface. The fragrance can leak out of the flacon.

▶ Use an absorbent cloth to wipe up any fragrance which has leaked out of the flacon onto the floor, the dryer or any dryer components (e.g. the fluff filter) immediately.

▶ If fragrance which has leaked out of a flacon: comes into contact with the **skin** - wash the skin thoroughly with soap and water; comes in contact with the **eyes** - rinse the eyes with clean water for at least 15 minutes; is swallowed - rinse out the **mouth** thoroughly with clean water. Seek medical advice in the case of contact with the eyes or if fragrance has been swallowed.

▶ If fragrance which has leaked out of a flacon comes in contact with clothing, change the clothing immediately. Wash the clothing or any cloths used for mopping up fragrance thoroughly with plenty of water and detergent.

▶ There is the risk of fire or damage to the tumble dryer if the following instructions are not observed:

- Never refill a flacon with fragrance.
- Never use a faulty fragrance flacon.

▶ Dispose of an empty fragrance flacon with the household waste and never use it for any other purpose.

▶ Please also observe the information supplied with the fragrance flacon.

Accessories

▶ Only use genuine Miele original spare parts and accessories with this appliance. If spare parts or accessories from other manufacturers are used, this will invalidate the guarantee, and Miele cannot accept liability.

▶ The tumble dryer can also be combined with a Miele washing machine in a washer-dryer stack. The appropriate “WTV” stacking kit (available to order) to match your dryer is required.

▶ Make sure that you order the correct plinth for this tumble dryer (available from Miele as an optional accessory).

⚠ Miele cannot be held liable for damage caused by non-compliance with these Warning and Safety instructions.

Control panel

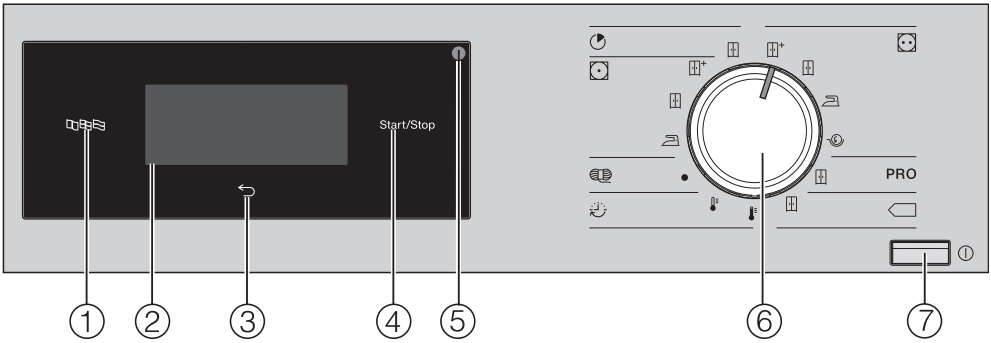

① **Language sensor control**
For selecting the current user language on the display.
The operating language is displayed again after switching the appliance on and off.

② **Touch display with sensor controls**
Displays the selected programme.
The programme settings are selected using the sensor controls in the touch display.

③ **Back sensor control**
Takes you back one level in a menu.

④ **Start/Stop sensor control**
Starts the selected programme and cancels a programme once it has started.

⑤ **Optical interface**
This is used by the Service department as a transmission point.

⑥ **Programme selector**
For selecting the drying programme.
The programme selector can be turned clockwise or anti-clockwise.

⑦ **Button**
For switching the tumble dryer on and off.
The tumble dryer switches off automatically to save energy. This occurs 15 minutes after the end of the programme/anti-crease phase, or 15 minutes after being switched on if no further selection is made.

Symbols on the control panel

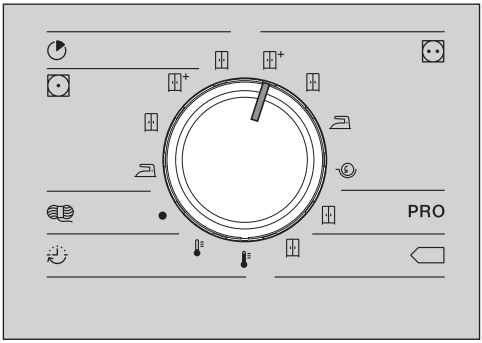

	Express
	Normal
	Minimum iron
+	Normal plus
	Normal
	Hand iron
	Woollens
	Timed drying programme
	Cool air
	Timed drying programme
	Warm air
	Cottons
+	Normal plus
	Normal
	Hand iron
	Machine iron
PRO	**Cottons PRO**
	Normal
	Cottons Eco
	Normal

Symbols on the display

Extras: use the *Extras* sensor control to add extras to a drying programme.

Low temperature: the *Low temperature* sensor control allows you to reduce the mechanical stress placed on the items while drying.

Anti-crease: the *Anti-crease* sensor control allows you to reduce creasing if the laundry is not removed immediately after the end of a programme.

Delay start: use the *Delay start* sensor control to set the starting time of a wash programme ...

... or the finish time

... or the time until the programme starts.

Timed drying programme: this sensor control enables you to select the duration of a timed drying programme.

Supervisor level: use the *Supervisor level* sensor control to alter the tumble dryer's settings.

Information: this allows you to view the selected options while the drying programme is running.

Sensor controls and touch display with sensor controls

The ⊞⊟⊞, ⮌, and *Start*/*Stop* sensor controls and the sensor controls in the display react to finger tip contact. Every touch of a sensor control is confirmed with an audible tone. You can switch off this tone (see “Supervisor level”).

> The control panel with sensor controls and the touch display can be scratched by pointed or sharp objects, e.g. pens.
> Only touch the display with your fingers.

Main menu

The main menu for a drying programme displays different values depending on the programme:

- The programme name of the selected programme with the selected drying level.
- The programme duration.
  - In drying level programmes (e.g. Cottons), the programme duration depends on the drying level selected and the size of the load.
  - For timed drying programmes, the programme duration can be selected freely by touching the sensor control ⏲.
- The selected extras.
- Further selectable options and settings in Supervisor level.

Examples of how to operate the appliance

Selection list

The ∧ and ∨ arrows on the right of the display indicate that choices are available.

The list scrolls down when the ∨ sensor control is touched. The list scrolls up when the ∧ sensor control is touched.

The scroll bar indicates that further options follow.

The currently selected language is marked with a frame.

Touch a language to select it.

Easy selection

If there are no arrows, the selection is limited to the displayed values.

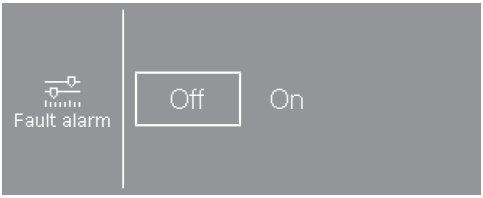

The currently selected value is marked with a frame.

Touch the required value to select it.

Alternatively, change the value using + and –.

After making your change, touch OK.

Setting numerical values

To change a numerical value, use the ∧ and ∨ arrows above or below the numbers you want to change.

Touch the ∧ and ∨ arrows and confirm with the OK sensor control.

Exiting a sub-menu

Select the back ⮌ sensor control to exit a sub-menu.

If you select a value in a sub-menu, but do not confirm with OK, you can discard this value by selecting the ⮌ sensor control.

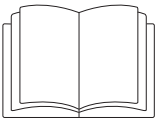

⚠ Risk of injury or damage to property due to improper installation.
Incorrect installation of the tumble dryer can lead to personal injury or damage to property.
Before commissioning the tumble dryer for the first time, make sure it has been installed and connected correctly. See “Installation”.

⚠ Damage caused by switching the appliance on too soon.
This can damage the heat pump in the tumble dryer.
After setting up the tumble dryer, wait for at least one hour before switching it on.

Follow all the steps required for initial commissioning.
During the commissioning process, you will need to define the settings for daily use of the tumble dryer. Some of the settings can only be configured during the initial commissioning process. After that, they must be changed by Miele Service.

These settings are also described under “Supervisor level”.

Switch on the tumble dryer

■ Press the ⏻ control.

The welcome screen will light up.

Setting the language

You will be asked to select the language you require for the display (supervisor language). It is possible to change the language at any time using the supervisor level.

■ Touch the ∧ or ∨ sensor control until the language you want appears in the display.

■ Touch the sensor control for the language you want.

The selected language is marked with a frame and the display will change to next setting.

Reference to external appliances

A reference to external hardware appears.

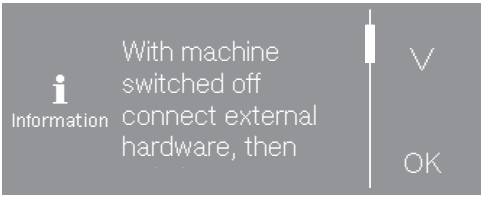

- Touch the ∨ sensor control to read all of the text in full.
- Confirm with the OK sensor control.

Connect the XCI box before initial commissioning. The tumble dryer must be disconnected from the mains for this process. Then start the commissioning process.

Setting the display brightness

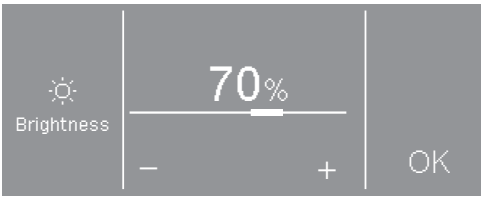

- Set the brightness you want with the – and + sensor controls and confirm your selection with the OK sensor control.

The display will change to the next setting.

Confirming the time request

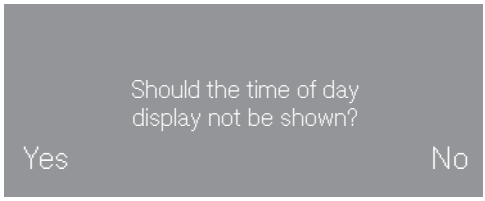

- Touch the yes or no sensor control.

If you select yes, the system will skip the time setting.

If you select no, the display will switch to the time setting.

Setting the time

- Use the ∨ and ∧ sensor controls to enter the time and confirm your entry with OK.

The display will change to the next setting.

Setting up a payment system

This option allows you to set up an existing payment system.

If you do not wish to set up a payment system:

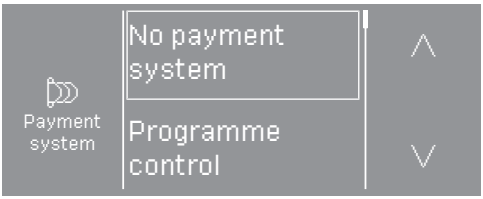

- Touch the No payment system sensor control.
- Continue reading from “Completing the commissioning process” under “Initial commissioning”.

If you wish to set up a payment system:
These settings can only be changed during the initial commissioning process. If you wish to change the settings after the commissioning process, please contact Miele Service.

- Touch the ∨ sensor control repeatedly until the setting you require appears.
- Touch the sensor control for the setting you want.

The process for setting up a payment system is described under “Payment systems” in the chapter “Supervisor level”.

Completing the commissioning process

The commissioning process is complete when a programme lasting longer than 20 minutes has been carried out in full.

If the power is interrupted prior to the start of the first drying programme (e.g. if the machine is switched off with the ⏻ button), the initial commissioning process can be completed again. Once a drying programme has been running for over 20 minutes, the initial commissioning process cannot be performed again.

- Turn the programme selector to .

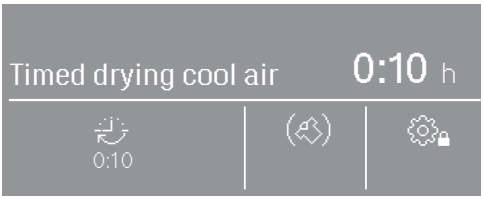

- Touch the sensor control.

- Touch the ∧ sensor control in the top right until 0:20 appears.
- Touch the OK sensor control.
- Touch the flashing *Start*/*Stop* sensor control.

After this programme has finished, the tumble dryer is ready for use.

Washing

- Heavily soiled laundry must be washed particularly thoroughly. Use sufficient detergent and select a high temperature. If in doubt, wash the items several times.
- New, coloured items must be washed thoroughly and separately. Do not dry these items with light coloured garments. There is the risk of colours running and discolouring other garments or even plastic components in the tumble dryer. Dark coloured fluff can also settle on light coloured garments and vice versa.

Drying

⚠ Damage due to foreign objects which were not removed from the laundry.
Foreign objects can melt, burn, or explode.
Ensure that any foreign objects, e.g. detergent dispensing balls, lighters, etc., have been removed from the laundry.

⚠ Risk of fire due to incorrect use and operation.
The laundry can burn and destroy the tumble dryer and the surroundings.
See the section on “Warning and safety” for further information.

- Check seams and stitching to ensure that the items are intact. This way you will avoid the danger of fillings coming out and causing a fire.
- Sew in or remove underwiring from bras.

Understanding the care label symbols

Drying	
	Normal/higher temperature*
	Low temperature*
* In this tumble dryer, items with these symbols can be dried together thanks to the gentle drying process.	
	Do not tumble dry
Ironing	
	Very hot
	Hot
	Warm
	Do not iron

2. Load the tumble dryer

Loading the laundry

Preventing textile damage.
Before loading, read chapter “1. Notes on correct laundry care.”

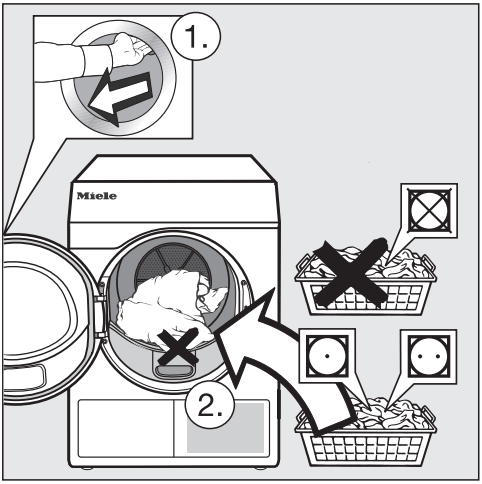

- Open the door.
- Load the laundry.

Preventing textile damage.
When closing the door, make sure that laundry does not get trapped in the door opening.

Do not overload the drum. Overloading can cause unnecessary wear and tear to the laundry and and cause a disappointing drying result. It can also cause more creasing.

Socket for the fragrance flacon

The “Fragrance flacon” chapter describes how to use the fragrance flacon.

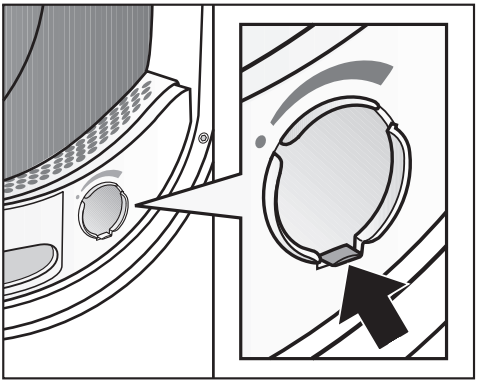

If you are not using a fragrance flacon: push the tab down completely (see arrow) so that the socket is closed. Otherwise, fluff will accumulate here.

Closing the door

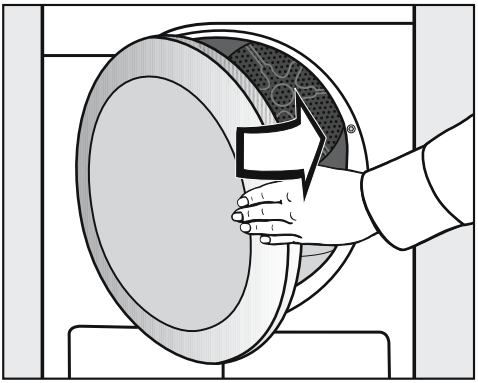

- Shut the door with a gentle swing.

Switch on the tumble dryer

■ Press the ⏻ control.

The drum lighting will come on.

The drum lighting will automatically go out after a few minutes and/or after the start of a programme to save energy.

Selecting a programme

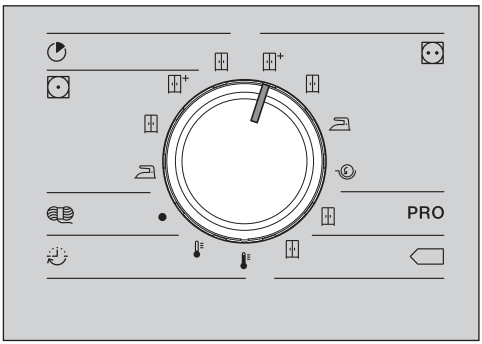

■ Turn the programme selector to the required programme.

The display will change to the standard menu for that programme.

Selecting the duration (timed programmes)

You can select the programme duration yourself.*

* The time frame for the selected programme duration can be limited by Miele Service.

- Warm air = 0:20–2:00 hours
- Cool air = 0:10–2:00 hours

■ Select one of these programmes.

The pre-set duration appears under the symbol (in this example 0:20 minutes).

■ Touch the sensor control.

■ Touch the ∧ or ∨ sensor controls to select the hours and/or minutes.

■ Touch the OK sensor control.

Selecting extra options

The drying programmes can be augmented with various extra options.

■ Touch the ✓≡ sensor control.

If the (⁂) or symbol appears, this means that only one extra can be selected. The message Active also appears after the sensor control has been touched.

■ Touch the sensor control for the extra you want.

The symbol for the selected extra lights up under the ✓≡ symbol.

Not all extras can be selected with every programme, only those programmes for which it makes sense.

Gentle tumble

Sensitive items are dried with less mechanical movement (fewer drum rotations).

Anti-crease

After the programme has finished, the drum will continue to rotate in a certain rhythm, depending on the selected programme. This helps to prevent creasing after the programme has ended.

The anti-crease function is switched off as the factory default setting. It can be switched on in the supervisor level with a variable duration of up to 12 hours.

Selecting delay start

Delay start must be activated in the supervisor level to allow it to be selected. In this case, one of these 3 symbols also lights up in the display: , , .

- Touch the sensor control with the clock symbol.

Depending on the delay start settings in the supervisor level, different delays in 15-minute intervals can be selected:

- The programme finish time: Finish at
- The programme start time: Start at
- The time to wait until the programme starts: Start in

The maximum delay start period is 24 hours. The left-hand side of the display shows what you are able to enter.

- Touch the ∧ or ∨ sensor controls to select the hours and/or minutes.
- Touch the OK sensor control.

If the delay start time is set to Finish at or Start at, the current times will be displayed.

- Touch the OK sensor control.

The start delay begins when the programme starts.

Changing/cancelling delay start

Before the programme starts

- Touch the sensor control with the clock symbol.
- You can change or delete the time.

After the programme has started

- Touch the *Start/Stop* sensor control.
- You can either cancel the programme or start it straight away.

Starting the programme

The programme can be started as soon as the *Start*/*Stop* sensor control is flashing on and off.

■ Touch the *Start*/*Stop* sensor control.

The drying programme starts. The *Start*/*Stop* sensor control lights up.

If a start delay has already been selected, this starts to count down before the drying programme starts automatically.

Drying and the time left for the drying programme are displayed.

The drying level reached is displayed if a drying level programme is running.

Tip: Touching the i sensor control allows you to display the options selected.

Programme duration/Estimated time remaining

The programme duration depends on the quantity of laundry, the type of fabric and the residual moisture in the laundry or also the water hardness. The running time for drying level programmes can therefore vary or “jump”. The tumble dryer's electronic control system adapts to these factors and then adjusts the displayed programme duration with increasing accuracy.

End of programme

The laundry will be cooled down shortly before the end of the programme. The laundry can now be unloaded.

The programme has ended when only ⏻Finish is left on the display.

If *Anti-crease* (⁂)* has been selected, the drum rotates in intervals. This reduces creasing if the laundry cannot be removed straight away.

* The anti-crease function is switched off as the factory default setting.

The tumble dryer will switch off automatically 15 minutes after the end of a programme.

Unloading the drum

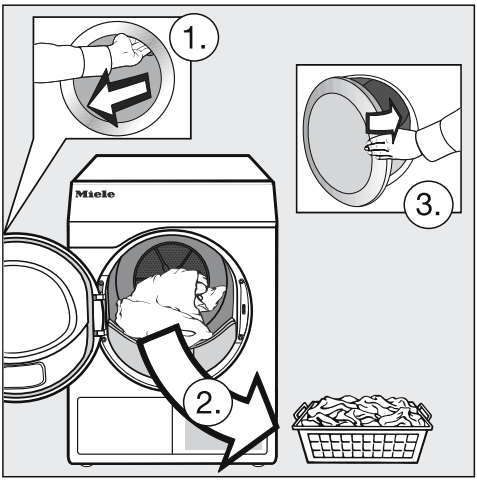

- Open the door.
- Remove everything from the drum.

Items left in the tumble dryer could be damaged by overdrying when the tumble dryer is used the next time.
Always remove all items from the drum.

- Switch the tumble dryer off.

Observe any maintenance notes

This tumble dryer requires regular maintenance, particularly if it is used on a continuous basis.

Tip: Please see “Cleaning and care” for details. Read the “Cleaning the appliance at the correct intervals” section first.

Programme overview

All weights marked with * are based on the weight of dry laundry.

Express	**Max. load 4 kg***
Use for	Hardy items for the *Cottons* programme with the *Normal* drying level.
Note	This programme is shorter compared to the *Cottons* programme.
Minimum iron	**Max. load 4 kg***
Normal plus, Normal, Hand iron	
Use for	- Minimum iron fabrics made of synthetic, cotton or mixed fibre. - Workwear, overalls, pullovers, dresses, trousers, table linen, tights.
Woollens	**Max. load 2 kg***
Use for	Woollen garments and fabric containing wool blends, e.g. pullovers, cardigans, tights.
Note	- Wool and wool blend items are only fluffed up; they are not dried completely. - Remove garments as soon as the programme has finished and leave to finish drying at room temperature.
Timed drying cool air	**Max. load 7 kg***
Use for	Any item which only needs airing.
Timed drying warm air	**Max. load 7 kg***
Use for	- Voluminous items e.g. jackets, pillows and padded items. - Fabrics made up of multiple layers, e.g. heavy cotton table cloths. - Individual items of laundry, e.g. towels, swimwear, tea towels.
Note	- Used for airing multi-layered fabrics or large items that dry unevenly due to their make-up. - Used for drying a few individual garments. - Do not select the longest drying time to start with. Check the items as you are drying them to find the optimum time.

Cottons	**Max. load 7 kg***
Normal plus, Normal	
Use for	- Single and multi-layered cotton items. - Towelling, T-shirts, underwear, jersey bed linen, baby clothes. - Workwear, jackets, cotton blankets, aprons, tea towels, bed linen, towels, table linen.
Note	Do not use overdry jersey fabrics (e.g. T-shirts, underwear, baby clothes) because they can shrink.
Hand iron, Machine iron	
Use for	- Cotton and linen fabrics. - Table linen, bed linen, starched laundry.
Tip	To prevent laundry from drying out, it should be rolled up until you are ready for ironing.
PRO **Cottons PRO**	**Max. load 7 kg***
Use for	Cotton items such as those described under *Cottons, Normal* with normal residual moisture.
Note	Items are dried to a *Normal* level only in this programme.
Cottons Eco	**Max. load 7 kg***
Use for	Cotton items such as those described under *Cottons, Normal* with normal residual moisture.
Note	- Items are dried to a *Normal* level only in this programme. - The programme is the most energy-efficient for drying cotton items with normal residual moisture levels.
Note for test institutes:	Test programme in accordance with Regulation 392/2012/EU measured in accordance with EN 61121.

Payment systems

Opening the door or cancelling the programme after it has started may cause a loss of credit (depending on how the tumble dryer was set up*).

* Either during the commissioning process or subsequently, a Miele service technician can reset the payment system so that programming changes can be made.

Changing a programme once it has started

You cannot change to another programme once a programme has started (this prevents unintentional alterations). You will need to cancel the current programme before you can select a new one.

⚠ Risk of fire due to incorrect use and operation.
The laundry can burn and destroy the tumble dryer and the surroundings.
See the section on “Warning and safety” for further information.

Programme selection not possible appears if the programme selector has been moved. The text disappears when the programme selector is set to the original programme.

Cancelling a programme

■ Touch the *Start*/*Stop* sensor control.

A message will appear in the display asking if you wish to cancel the programme.

■ Touch the Yes sensor control.

Reselecting a cancelled programme

■ Open and close the door.

■ Select and start a new programme.

Adding laundry

■ Open the door.

⚠ Risk of burns by touching hot laundry in the drum.
You could burn yourself.
Let the laundry cool down and remove it carefully.

■ Add items.

■ Close the door.

■ Start the programme.

Interruption to the power supply

If the power supply is interrupted because the tumble dryer has been switched off with the button ⏻:

■ Switch the tumble dryer on.

■ Touch the *Start*/*Stop* sensor control.

If the power supply is interrupted by a power cut:

■ When power is restored, confirm with OK.

■ Touch the *Start*/*Stop* sensor control.

Time remaining

Altering the programme sequence can cause adjustments in the h min time remaining display.

Inserting a fragrance flacon

Fragrance flacons (optional accessories) can be used to give your laundry a pleasant scent.

⚠ Risk of fire and damage to the health if fragrance flacons are used incorrectly.

The leaked fragrance can damage your health if it comes into contact with your body. Leaked fragrance can cause fire.

Before using a fragrance flacon, please read “Using a fragrance flacon (optional accessory)” under the “Warning and safety instructions”

Only hold the fragrance flacon as illustrated. Do not hold it at an angle or tip it as the fragrance will leak out of it.

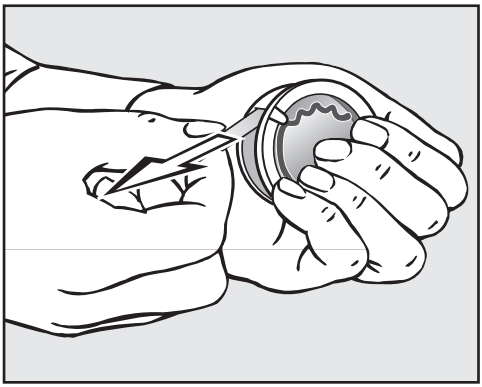

- Hold the fragrance flacon securely so that you do not open it by mistake.
- Pull off the protective seal.
- Open the door of the tumble dryer.

The fragrance flacon is inserted in the upper fluff filter. The socket is next to the recessed grip.

If you are not using a fragrance flacon, the cover to the unused socket must remain closed to prevent the build-up of fluff.

Push the tab on the cover to the bottom (see arrow).

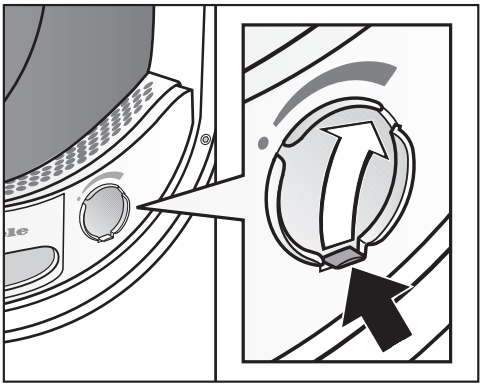

- Open the cover using the tab until the tab is right at the top.

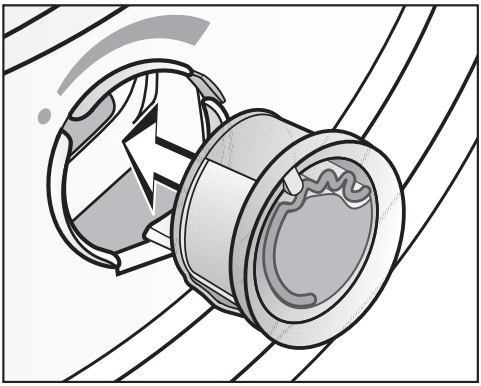

■ Insert the fragrance flacon as far it will go into the socket.

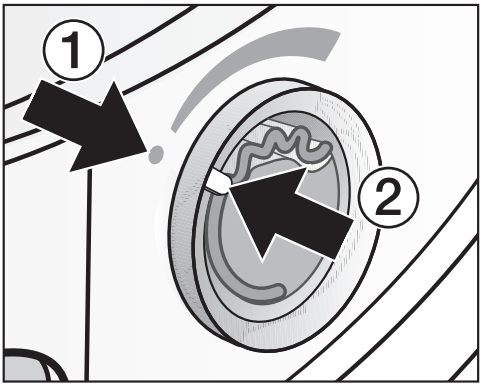

The markers ① and ② must line up with one another.

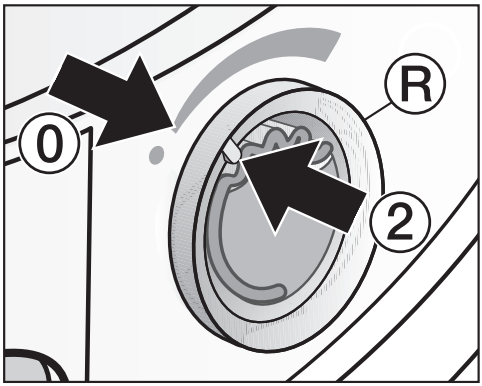

■ Turn the outer ring Ⓡ clockwise a little.

The fragrance flacon may slip out. Turn the outer ring in such a way that the markers ② and ⓪ line up.

Opening the fragrance flacon

Before drying, you can select the intensity of the fragrance.

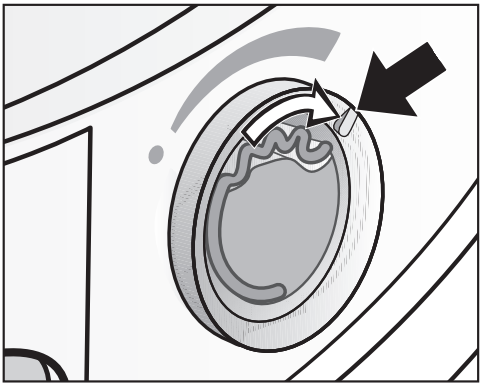

- Turn the outer ring clockwise: the further you open the fragrance flacon, the more intense the fragrance.

Damp laundry and longer drying durations with sufficient heat transfer are needed for the fragrance to be released into the laundry effectively. The fragrance will also be noticeable in the ambient air during the process. The *Timed drying cold air* programme will not generally apply fragrance.

Closing the fragrance flacon

After drying, the fragrance flacon should be closed to prevent the fragrance from escaping needlessly.

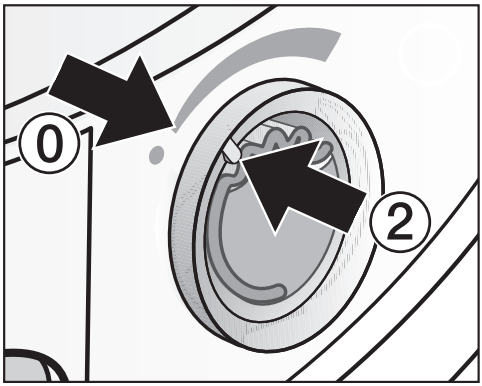

- Turn the outer ring anti-clockwise until the marker ② is in position ⓪.

If you wish to dry without the fragrance occasionally: remove the fragrance flacon and store it in its original packaging.

Replace the fragrance flacon with a new one when the intensity of the fragrance is no longer sufficient.

Removing/replacing the fragrance flacon

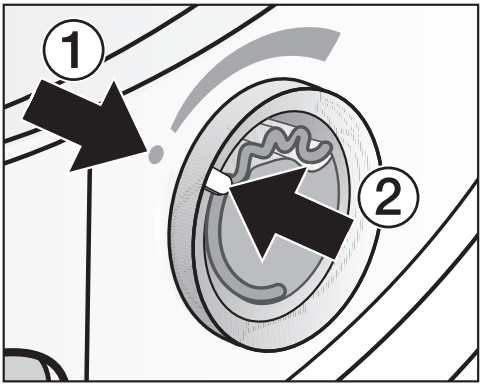

■ Turn the outer ring anti-clockwise until the markers ① and ② line up.

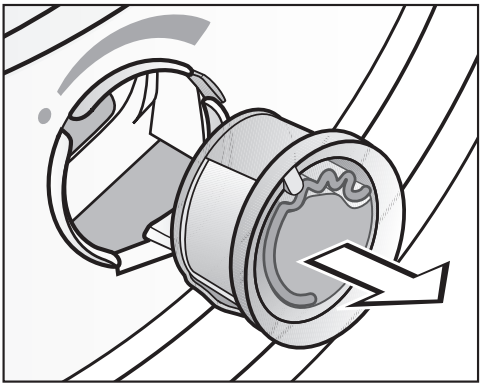

■ Replace the fragrance flacon with a new one.

When not in use, you can store the fragrance flacon in its original packaging.

Fragrance flacons are available to order from Miele or online.

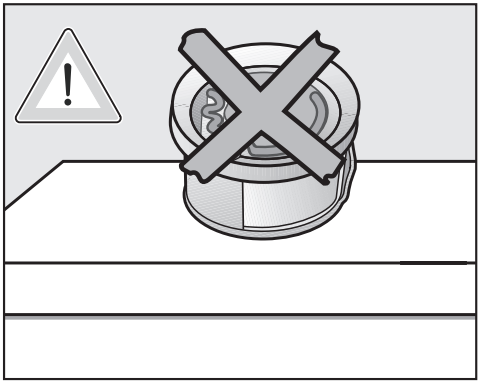

The fragrance can leak out of the flacon. Do not lay the fragrance flacon down.

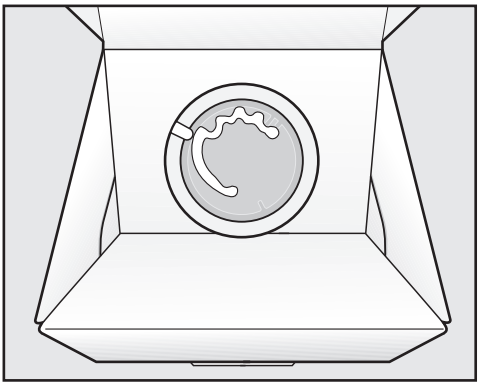

- If you are keeping the fragrance flacon in its original packaging, do not store the packaging upright on its edge or upside down. Otherwise, the fragrance will leak out.
- Always store in a cool, dry place away from direct sunlight.
- When purchasing new fragrance flacons, only remove the protective seal just before use.

When to clean

This tumble dryer is equipped with a multi-stage filter system, which consists of a fluff filter (1.) and a filter in the plinth (2.).
This filter system collects all fluff generated during the drying process.

Failure to clean the filter regularly could increase drying times.

⚠ Fire hazard due to irregular maintenance.
Too many fluff deposits in the filter system and tumble dryer will result in a risk of fire.
Check the filter system and air supply area on a regular basis. Clean the filter if you find any fluff deposits.

⚠ Damage caused by a missing or damaged filter system.
Too many fluff deposits in the filter system and tumble dryer will result in a risk of appliance malfunctions and a risk of fire.
Never use the tumble dryer without the filter system. Always replace a damaged filter system immediately.

1. When to clean the fluff filter

The fluff filters are located in the drum loading area.

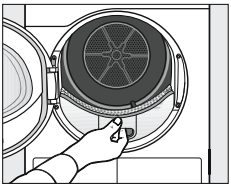

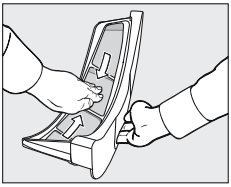

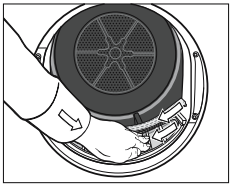

Clean the filters after every programme and always clean them when the following prompt appears in the display: Clean the fluff filter and rinse the plinth filter..

- To delete the message: touch the OK sensor control.

2. When to clean the filter in the plinth

The filter in the plinth is behind the fluff filter flap on the bottom left.

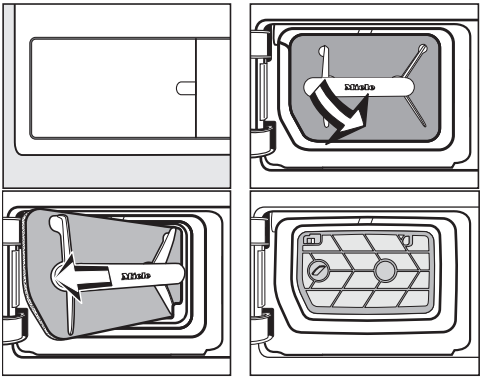

With normal use

Clean the filter when this prompt appears in the display: Clean the fluff filter and rinse the plinth filter..

With continuous use

Clean once a day and also when the prompt appears in the display.

The surface of the filter in the filter insert is visible after removing the fluff filter. This filter surface also has to be cleaned.

- To delete the message: touch the OK sensor control.

⚠ Damage caused by insufficient cleaning or by operation with a worn, damaged filter in the plinth.

There is insufficient flow of air and heat in the heat exchanger due to clogging. This requires a visit from the Service department.

This can be avoided by following the advice in these operating instructions.

3. When to clean the grille in the bottom right/heat exchanger for heat dissipation

Clean when Open bottom right grille, clean heat exchanger appears in the display.

The bottom right grille can be removed. This covers the heat exchanger for heat dissipation.

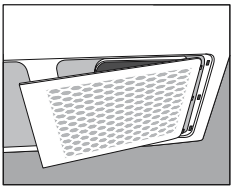

- Keep the room where the tumble dryer is located free from dust and fluff. Doing so will mean that you will rarely have to clean the grille.
- See “Bottom right grille/heat exchanger”.
- Also check and clean the filter in the plinth and the surfaces of the fluff filters.
- To delete the message: touch the OK sensor control.

Cleaning the fluff filters

This tumble dryer has 2 fluff filters in the loading area. The upper and lower fluff filters trap fluff produced during the drying process.

Removing the fragrance flacon

The intensity of the fragrance will be diminished if the fluff filters and the plinth filter are not cleaned.

- Remove the fragrance flacon as described in “Removing/replacing the fragrance flacon” under “Fragrance flacons”.

Removing visible fluff

Remove any fluff after every drying cycle.

Tip: You can also use a vacuum cleaner so that you can remove the fluff without touching it.

- Open the door.

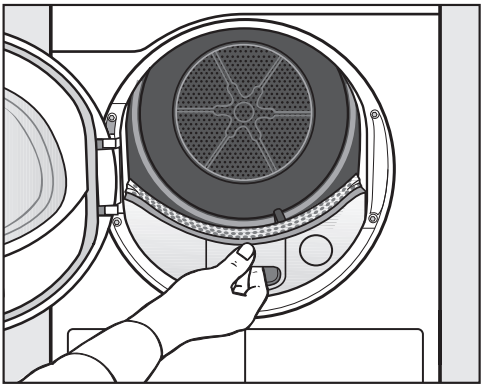

- Pull the upper fluff filter forwards to remove it.

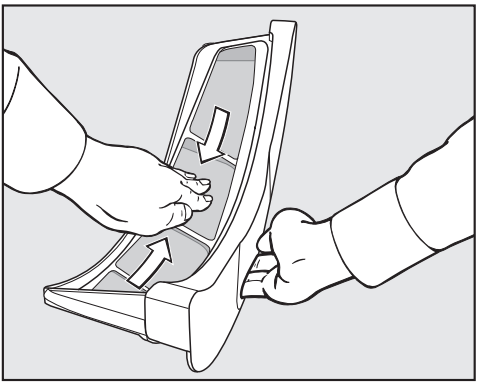

- Remove the fluff (see arrows).

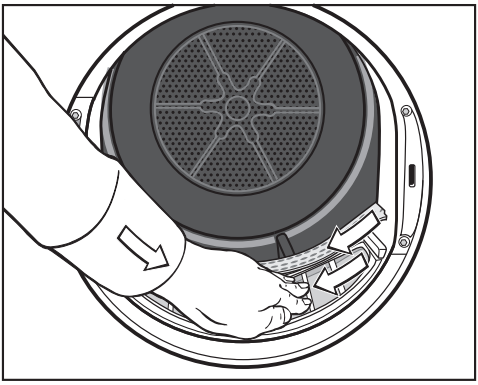

- Remove the fluff (see arrows) from the filter surface of all the filters and the perforated laundry deflector.
- Push the upper fluff filter back into position until it clicks.
- Close the door.

Cleaning the fluff filters and air flow openings thoroughly

If the drying duration has become longer or the surface of the filters is visibly compacted with fluff, you should carry out the following cleaning procedure.

Cleaning the fluff filters while dry

- Pull the upper fluff filter forwards to remove it.

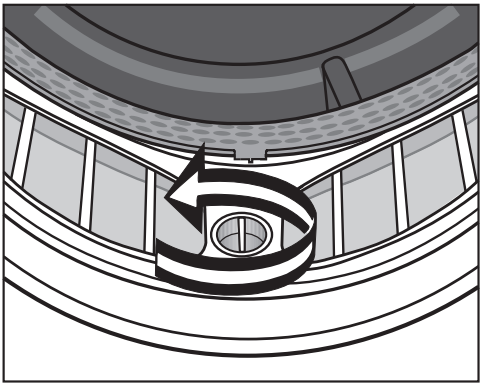

- Turn the yellow dial until it clearly engages.

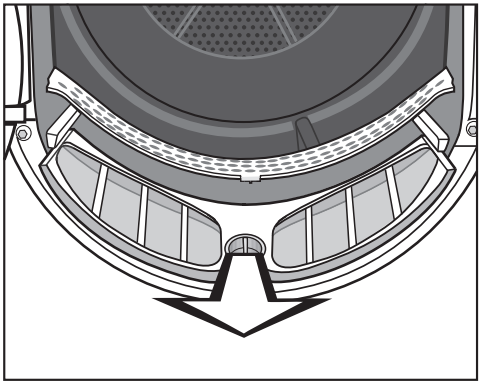

- Pull the fluff filter forwards to remove it.

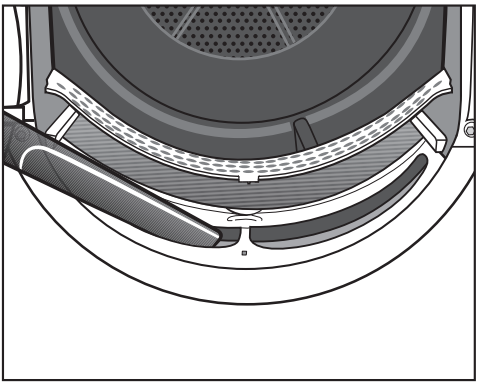

- Use a vacuum cleaner with a long crevice nozzle attached to remove any visible fluff from the upper air flow openings.

Cleaning the fluff filters with water

- Rinse the filter surfaces through under warm running water.
- Wipe the smooth plastic surfaces of both fluff filters with a damp cloth to clean them.

Wet filters could cause operational faults while drying.
Shake the fluff filters thoroughly and then dry them carefully.

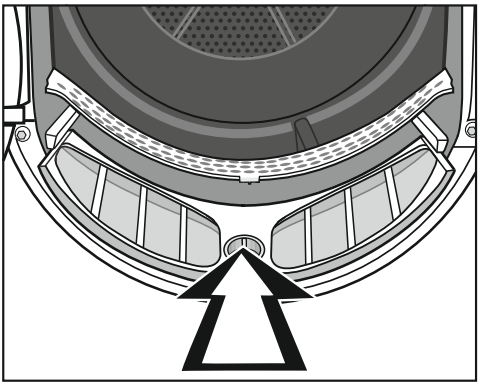

- Push the lower fluff filter in completely and lock it with the yellow dial.

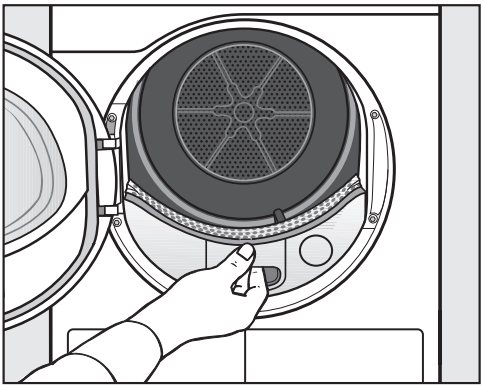

- Push the upper fluff filter all the way in.
- Close the door.

Filter in the plinth

The fluff filter in the plinth collects finer fluff, hair and detergent residues that have got through the surfaces of the fluff filters.

Removing the fluff filter

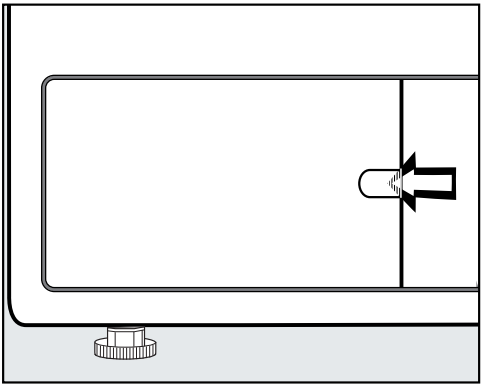

- Reach behind the catch with your finger.
- Open the fluff filter flap.

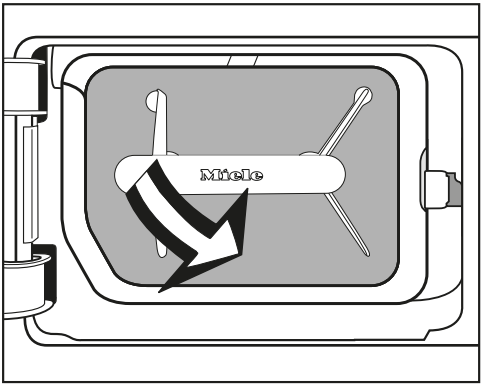

❶ Use the handle to pull out the fluff filter at an angle forwards and to the right.

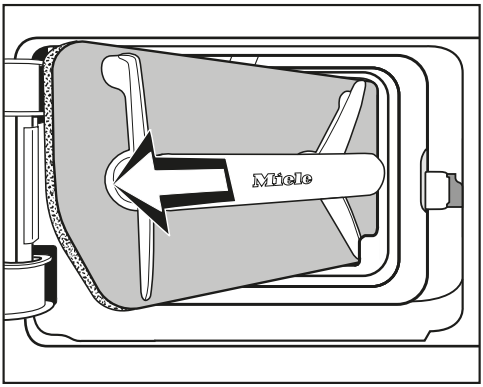

❷ Pull the fluff filter out at an angle.

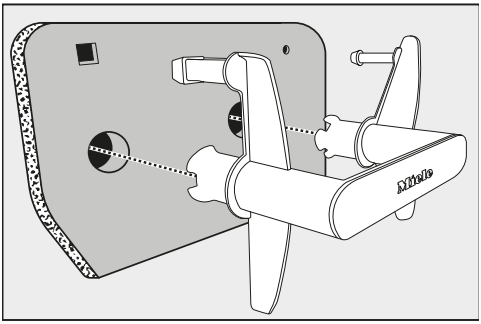

- Pull the handle out of the fluff filter.

Cleaning the fluff filters with water

- Clean the filter thoroughly under running water.
- Squeeze the filter very carefully several times as you rinse it.
- Rinse the filter until all visible residues have been removed.

⚠ Damage caused by an insufficiently cleaned or damaged fluff filter.

If the filter has not been properly cleaned or is damaged, the heat exchanger will be clogged. There will be an insufficient flow of air and heat in the heat exchanger. This will require a visit from the Customer Service Department.

Before and after cleaning, check the plinth filter in accordance with the description in “Replacing the plinth filter”. The plinth filter must be perfectly functional and undamaged after cleaning.

- Use a damp cloth to remove any fluff from the handle.

Replacing the plinth filter

⚠ Filter wear caused by continuous tumble dryer use.

If the tumble dryer is in continuous use and is being cleaned regularly, the plinth filter can begin to show signs of wear after a while. This can clog up the heat exchanger.

Replace the filter immediately if you see the following signs of wear before or after cleaning (optional accessory).

Poor fit

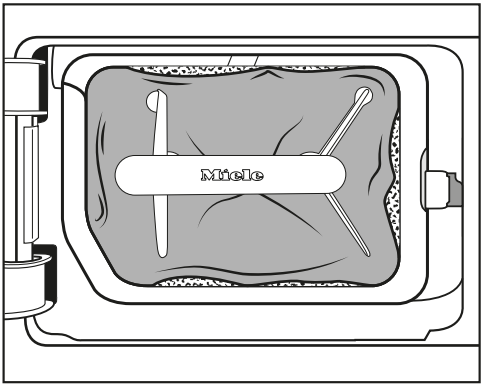

The edges of the filter do not sit properly and the filter is deformed. Fluff will blow into the heat exchanger unfiltered through edges that do not sit properly. This will cause a permanent obstruction in the heat exchanger.

Deformation

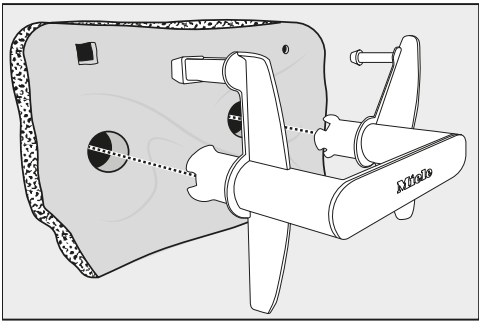

Deformations indicate that the filter has become blocked and worn by continuous use.

Cracks, tears, indentations

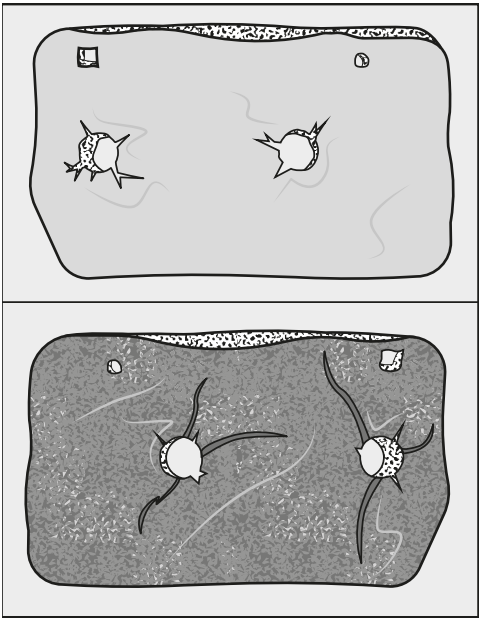

Fluff will blow into the heat exchanger through cracks and tears and will cause obstruction.

Indentations indicate that the filter has become blocked and worn by continuous use.

White residues or residues of other colours

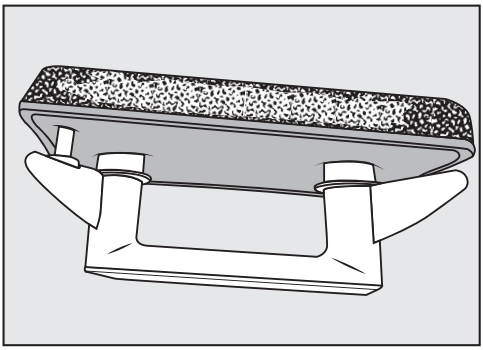

Residues arise from laundry fibres and traces of detergent components which can clog the filter. They can be found on the front and side edges of the filter. In extreme cases, they can form stubborn crust.
Residues are a sign that the filter is no longer a snug fit at the sides, even if it appears to be perfect: fluff is getting in unfiltered at the edges.

If these residues appear on the filters again soon after cleaning, the filter must be replaced.

Cleaning the filter insert (in the plinth)

The surface of the filter in the filter insert is visible after removing the fluff filter in the plinth. This filter surface must only be cleaned if there is a visible accumulation of fluff.

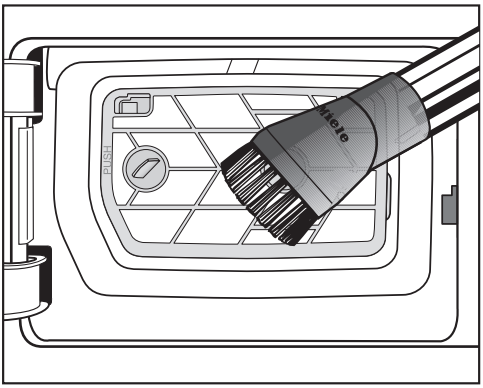

■ Carefully vacuum up any visible fluff or soiling. Use a dusting brush or the narrow crevice nozzle.

If there are visible blockages or other residues after cleaning: remove the filter insert and clean it under running water. If stubborn residues are not removed, these can lead to faults over time.

Removing the filter insert

If the filter insert is clogged up and soiled, it must be removed and cleaned under running water.

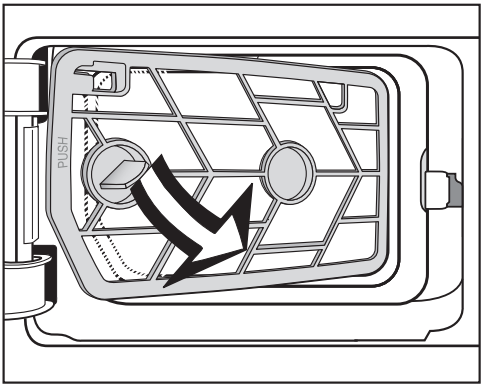

❶ Use the handle to pull out the filter insert at an angle forwards and to the right.

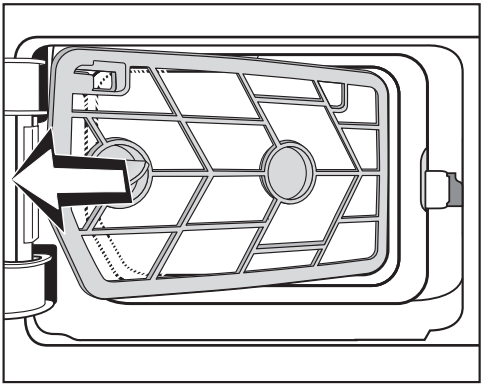

❷ Then pull the filter insert out at an angle.

■ Rinse the filter surface of the insert under warm running water.

Wet filters could cause operational faults while drying.

Shake the filter insert thoroughly and then dry it carefully.

Check the cooling fins on the heat exchanger

⚠ Danger of injury if you touch the cooling fins.

You could cut yourself.

Do not touch the cooling fins with your hands.

After removing the filter insert, visually check the cooling fins on the heat exchanger. Check for any accumulation of fluff.

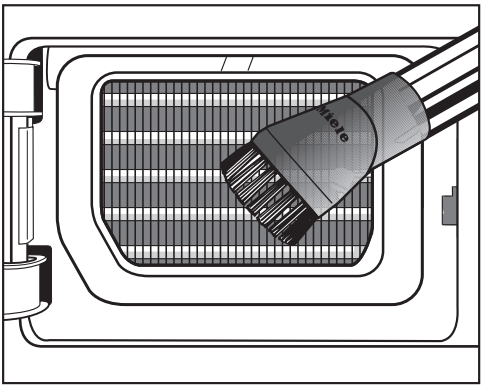

- If you notice any visible soiling, carefully vacuum it up with a vacuum cleaner. Use a dusting brush or the narrow crevice nozzle.

⚠ Risk of damage if cooling fins are cleaned incorrectly.

The cooling fins can suffer damage or distortion. This could hinder the operational performance of the tumble dryer.

Clean using a vacuum cleaner with a dusting brush attached. Only pass the vacuum cleaner dusting brush over the fins lightly, without applying any pressure.

Refitting the filter insert (in the plinth)

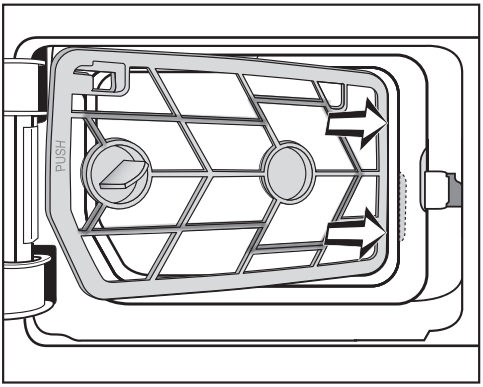

❶ Use the handle to slide the filter insert to the right at an angle behind the edge.

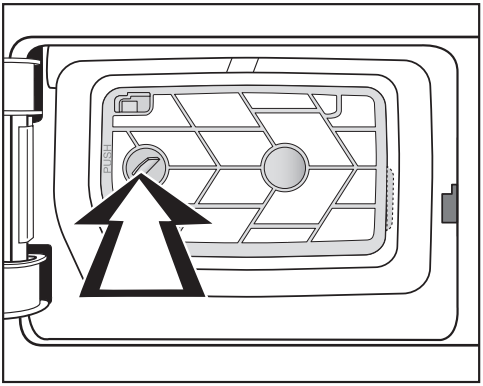

❷ Then press on the handle until the filter is secured in position on the left.

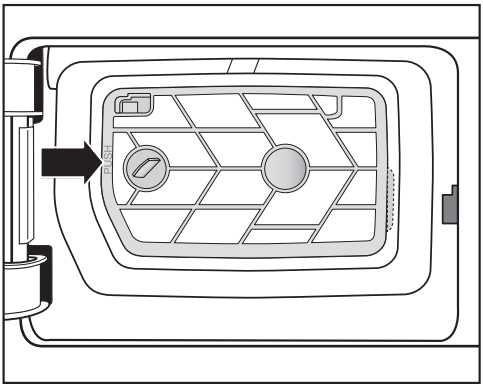

❸ Press the frame of the filter insert in at the positions marked PUSH until it audibly engages.

Refitting the fluff filter in the plinth

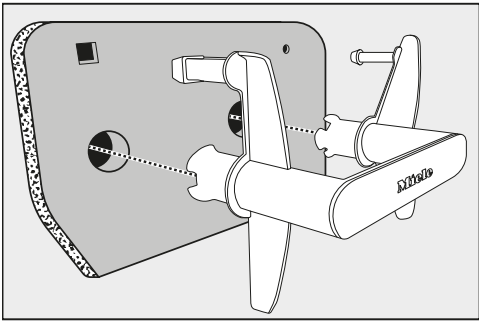

■ Fit the fluff filter back on the handle. Make sure it is the correct way round.

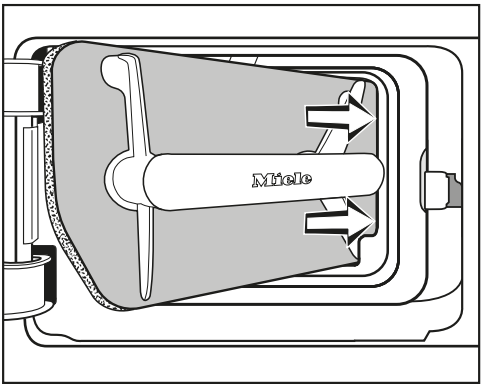

❶ Use the handle to slide the fluff filter on the right at an angle behind the edge.

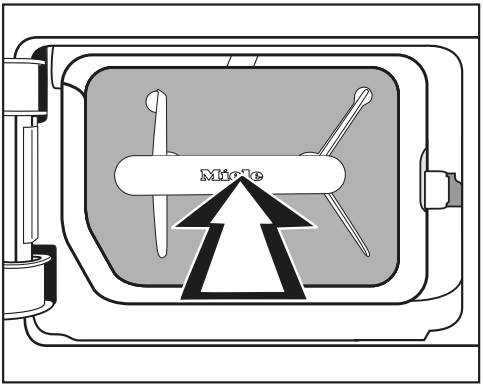

❷ Then press on the handle until the fluff filter is secured in position.

Cleaning and closing the fluff filter flap

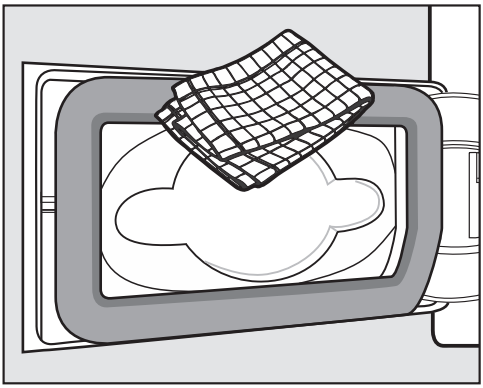

■ Use a damp cloth to remove any fluff. Make sure that you do not damage the rubber seal when doing this.

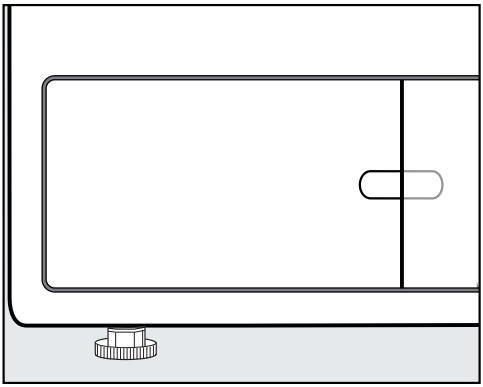

■ Close the fluff filter flap.

The plinth filter must be inserted and the fluff filter flap must be closed to ensure the system is correctly sealed and that the tumble dryer will function correctly.

Cleaning the bottom right grille/heat exchanger

The heat exchanger's cooling fins behind the grille can become blocked with dust and dirt drawn in from the surrounding area.

Removing the grille

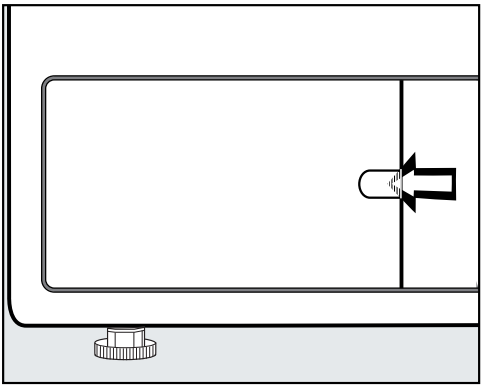

- Open the fluff filter flap.

Open the bottom right grille, e.g. using a spoon handle.

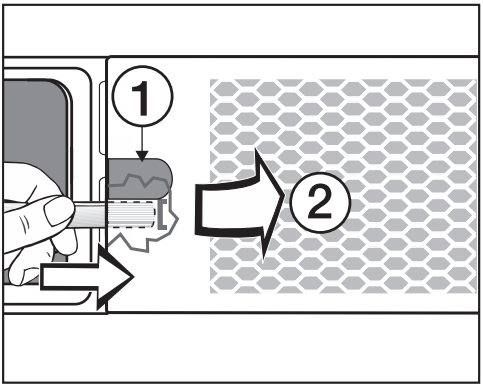

- Insert a spoon handle underneath the grille (under the recess ①).
- Press and lever the grille gently until it opens on the left-hand side ②.
- Open the grille from left to right and pull it off at an angle to the front.

Cleaning the cooling fins

- Check whether the cooling fins are clogged.

⚠ Danger of injury caused by touching the cooling fins.
You could cut yourself.
Do not touch the cooling fins with your hands.

If there is visible soiling:

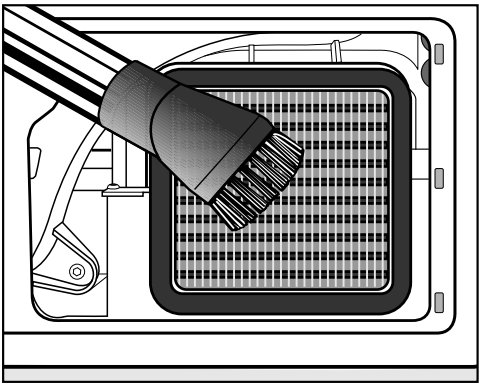

- Carefully vacuum up any visible fluff or soiling. Use a dusting brush or the narrow crevice nozzle.

⚠ Risk of damage if cooling fins are cleaned incorrectly.
The cooling fins can suffer damage or distortion. This could hinder the operational performance of the tumble dryer.
Clean using a vacuum cleaner with a dusting brush attached. Only pass the vacuum cleaner dusting brush over the fins lightly, without applying any pressure.

Replacing the grille

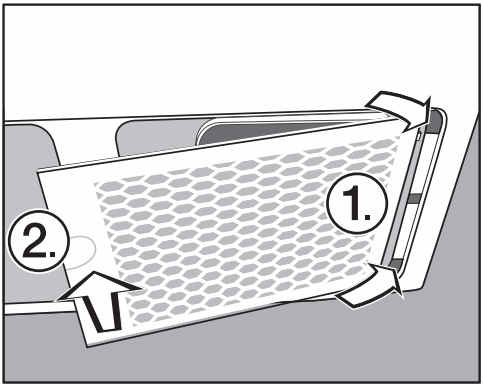

- Insert the grille on the right-hand side.
- Press the grille firmly on the left-hand side.

Cleaning the tumble dryer

Disconnect the tumble dryer from the electrical supply.

⚠ Damage caused by the use of unsuitable care products.

Unsuitable care products could damage plastic surfaces and other parts.

Do not use any solvents, abrasive cleaners, glass cleaners, or all-purpose cleaners.

⚠ Danger of electric shock caused by water.

There is a risk of electric shock if water runs over or into the tumble dryer.

Never spray the tumble dryer with water. Only ever clean the appliance with a slightly damp, soft cloth.

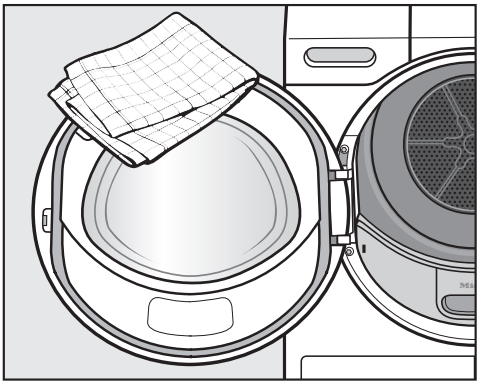

- Clean the tumble dryer and the seal on the inside of the door with a slightly damp soft cloth and a mild solution of washing-up liquid and water.
- Dry all parts with a soft cloth.
- The drum and other stainless steel parts can be cleaned with a suitable stainless steel cleaner.

Problem solving guide

Many malfunctions and faults that can occur in daily operation can be easily remedied. Time and money will be saved because a service call will not be needed.

The following guide may help you to find the reason for a malfunction or a fault, and to correct it.

The display indicates the following messages or faults

Message	Cause and remedy
Drum empty or the laundry is too dry. **lights up after a programme has been cancelled.**	This is not a fault. In some programmes, if the drum has been under-loaded or is empty, the programme will be cancelled. This can also happen if the items are already dry. ■ Open the door and check the laundry. ■ Add items if necessary. ■ Close the door to resume drying. Dry individual items using the *Warm air* programme.
i Power outage. Programme stopped	There has been a power outage. ■ When power is restored, confirm with OK. ■ Touch the *Start/Stop* sensor control.
Finish / Cooling down **lights up and the drying process is not yet finished.**	This is not a fault. The laundry is still being cooled. The programme is just about to end. ■ You can remove the laundry and spread it out to cool down or leave it in the tumble dryer to cool down until the end of the programme.
i Open bottom right grille, clean heat exchanger **lights up at the end of a programme.**	The heat exchanger's cooling fins behind the grille can become blocked with dust and dirt drawn in from the surrounding area and the airways can become blocked with fluff. ■ Clean as described in “Bottom right grille/heat exchanger” under “Cleaning and care”. ■ Check and clean the filters in the loading area and in the plinth. ■ To delete the message: touch the OK sensor control.

Message	Cause and remedy
i Clean the fluff filter and rinse the plinth filter. **lights up at the end of a programme.**	The tumble dryer is not working correctly or economically. Possible causes could be clogging caused by fluff or detergent residue. ■ Normally, all you have to do is clean the fluff filter. ■ Also check the plinth filter and clean it if necessary. ■ If you have removed the plinth filter, also check the filter insert behind it. Clean it if necessary. Please see “Cleaning and care” for notes on cleaning. ■ To delete the message: touch the OK sensor control.

Message	Cause and remedy
Rinse the fluff filter and the plinth filter. Check the airways. **lights up after a programme has been cancelled.**	You have attempted to dry only a few items of varying size. A smaller item has been sucked into the loading area in the door and is clogging the holes in the laundry deflector. ■ To delete the message: touch the OK sensor control. ■ Open the tumble dryer door. ■ Remove the item that is blocking the holes. ■ Always dry small, individual items together with larger items. If you are able to exclude all this, an even more major problem has occurred. See below.
	The system has been clogged by fluff or detergent residue. ■ Clean all lint filters and air channels. ■ Check whether the fluff filters in the loading area and plinth are free from damage and in good working order. ■ If you have removed the plinth filter, also check the filter insert behind it. Clean it if necessary. ■ If you have removed the filter insert, also check the heat exchanger behind it. Clean it if necessary. Please see “Cleaning and care” for notes on cleaning. Damaged, deformed or uncleanable fluff filters must be replaced. ■ To delete the message: touch the OK sensor control.
Rinse the fluff filter and the plinth filter. Check the airways. **continues to light up after a programme has been cancelled, despite thorough cleaning.**	The plinth filter looks clean after thorough cleaning. However, the programme terminates and the error message appears again. It is likely that there is still underlying residue that could not be removed. ■ To delete the message: Touch the OK sensor control. ■ Replace the plinth filter with a new one. ■ You can reactivate the removed, “old” plinth filter in the washing machine. Follow the instructions described in “Problem solving guide – Reactivating the plinth filter”.

Message	Cause and remedy
Check water drainage. **lights up after a programme has been cancelled.**	The condensate drain is faulty. ■ Check that the drain hose is in good working order and is not bent. ■ To delete the message: open and close the door while the tumble dryer is switched on.
Plinth filter not fitted. Please fit it.	The plinth filter has not been inserted. ■ Check the filter in the plinth. Removing the filter during a drying programme will result in the programme being cancelled.
Fault F. If restart fails, call Service. **lights up after a programme has been cancelled.**	There is no obvious cause. ■ Note the prompt in the display. ■ Touch the OK sensor control. If the programme terminates again with the same error message, then there is a fault. Contact Miele Service.
Obstruction detected. Untangle laundry and restart **lights up after a programme has been cancelled.**	The laundry is unevenly distributed or has rolled up. ■ Open the door and loosen the laundry. Take out some of the laundry if necessary. ■ Close the door. ■ Start a programme.

Unsatisfactory drying results

Problem	Cause and remedy
The laundry is not sufficiently dry.	The load consisted of different types of fabric. ■ Finish drying using the *Timed drying warm air* programme.
Laundry or feather filled pillows smell after drying.	The laundry was washed with insufficient detergent Feathers are a natural product and this is quite normal. ■ Laundry: use sufficient detergent next time. ■ Allow feather pillows to air after tumble drying.
Items made of synthetic fibres are charged with static electricity after drying.	Synthetic fibres tend to attract static charge. ■ Static charge can be reduced by adding a fabric conditioner to the final rinse in the washing programme or a fabric conditioner sheet to the load when drying.
There is a build-up of fluff.	Fluff is principally the result of friction when garments are being worn and to some extent when they are being washed. Machine drying hardly causes any fluff to form and has no appreciable effect on the lifetime of the fabric. Fluff is collected by the fluff filters and fine filter and can be easily removed ■ (see “Cleaning and care”).

The drying cycle duration is very long

Problem	Cause and remedy
The drying process goes on too long or even switches off*.	The room where the tumble dryer is located is too warm. ■ Ventilate the room thoroughly.
	Detergent residues, hair and fine fluff can clog the filters. ■ Clean the fluff filters and the filter in the plinth. See “Cleaning and care” for an in-depth description. ■ If you have removed the plinth filter, also check the filter insert behind it. Clean it if necessary. ■ If you have removed the filter insert, also check the heat exchanger behind it. Clean it if necessary.
	The cooling fins behind the bottom right grille are soiled. ■ Clean as described in “Bottom right grille/airways” under “Cleaning and care”.
	The laundry is too damp. ■ Spin using a higher spin speed in the washing machine.
	The drum is too full. ■ Do not exceed the maximum load size for the drying programme selected.
	Metallic components, e.g. zips, have prevented the tumble dryer from registering the correct laundry moisture level. ■ Open any zips next time. ■ If the problem recurs, dry these items using the *Timed drying warm air* programme.

* Switch the tumble dryer off; wait a short while before starting a new programme.

General problems with the tumble dryer

Problem	Cause and remedy
There are humming noises.	The compressor is operating. These noises are quite normal and do not indicate a fault.
The drum lighting does not come on.	The drum lighting switches off automatically when the door is closed. To save energy, the drum lighting will switch off after a few minutes if the door is left open for an extended period. The drum lighting will come on when the door is opened if the tumble dryer is switched on.
The display is in a different language.	A different language has been selected. ■ Set the language you want. The flag symbol ⚑ will guide you.

Reactivating the plinth filter

You can reactivate one or more dirty plinth filters in the washing machine. You will then be able to use the plinth filter again for a reasonable period of time.

- Wash the plinth filter(s) separately, not with any laundry items. Do not add any detergent.

Tip: Select a short wash programme with a maximum temperature of 40 °C and a maximum spin speed of 600 rpm.

- Select the *Separate rinse* programme, for example.

You can re-insert the plinth filter once the wash and spin cycle is complete. You can continue to use a reactivated plinth filter provided that it does not show any signs of wear.

You must stop using a reactivated plinth filter if it shows signs of wear or deformation.

Please see “Cleaning and care – Replacing the plinth filter” for details.

Contact in the event of a fault

In the event of any faults which you cannot remedy yourself, please contact your Miele dealer or the Miele Customer Service Department.

You can book a Miele Customer Service Department call-out online at www.miele.com/service.

Contact information for the Miele Customer Service Department can be found at the end of this document.

Please quote the model identifier and serial number of your appliance (Fabr./SN/Nr.) when contacting the Miele Customer Service Department. This information can be found on the data plate.

Please note that telephone calls may be monitored and recorded for training purposes and that a call-out charge will be applied to service visits where the problem could have been resolved as described in this booklet.

Open the door of your tumble dryer to find the data plate:

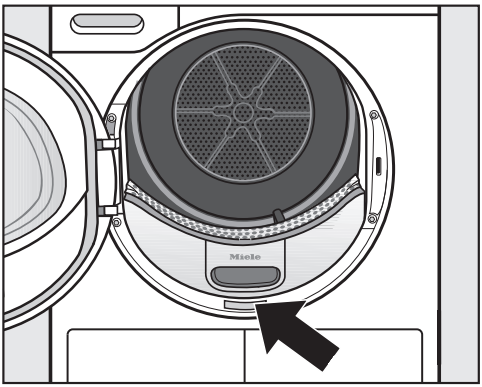

Optional accessories

Optional accessories for this tumble dryer are available from your Miele Dealer or from the Miele Spare Parts Department.

Front view

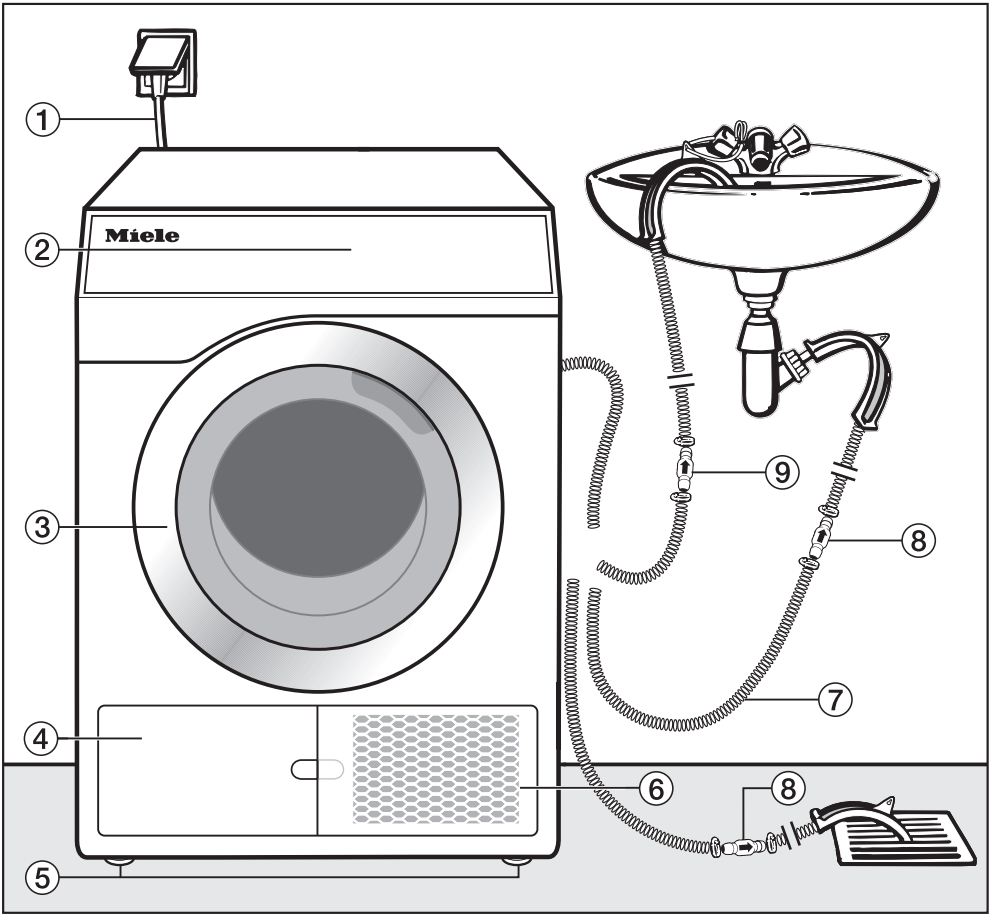

① Mains connection cable

② Control panel

③ Door

④ Fluff filter flap for the filter in the plinth

– Open only when a prompt appears in the display

⑤ 4 height-adjustable screw feet

⑥ Bottom right grille = Air cooling opening

– Open only when a prompt appears in the display

⑦ Drain hose for condensation

⑧ Non-return valve, required

⑨ Non-return valve, recommended

Rear view

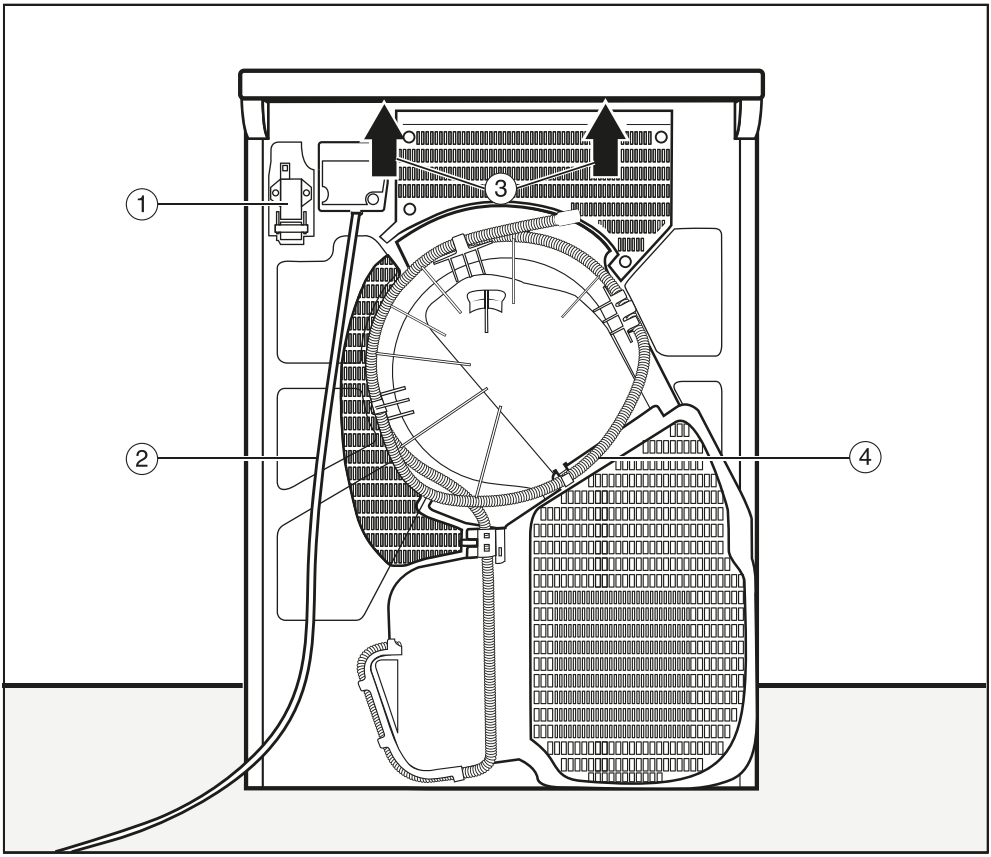

① Interface for communicating with external devices

② Mains connection cable

③ Recesses under the protruding lid for transporting the appliance

④ Drain hose for condensation

Locations

All measurements are in mm.

The distances between the machine and the wall are recommendations to help make it easier to carry out service work. If installation space is limited, the machine can also be pushed up against the wall.

Side view

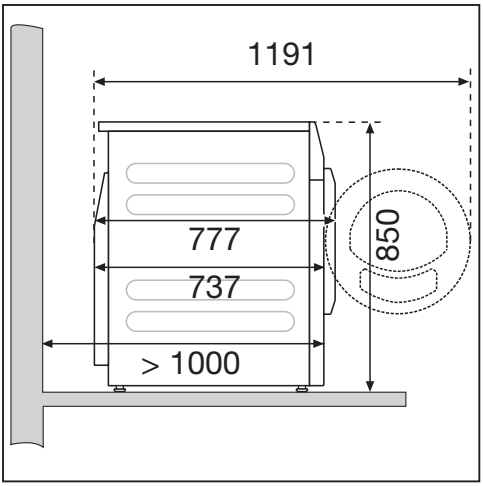

Steel plinth

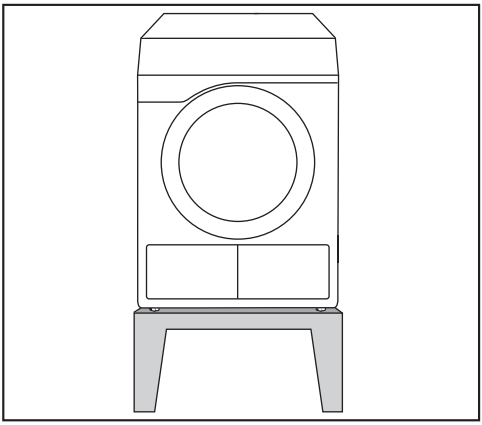

Steel plinth* (open or closed bases)

View from above

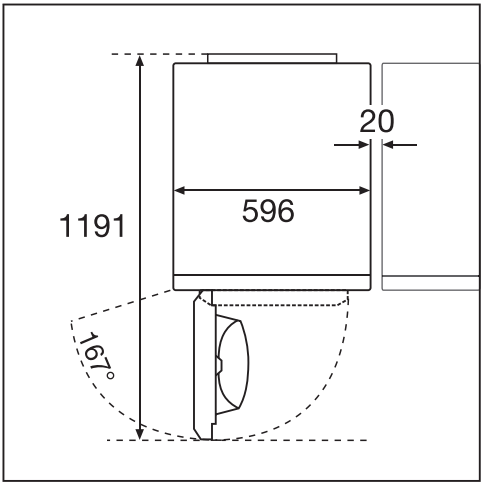

Washer-dryer stack

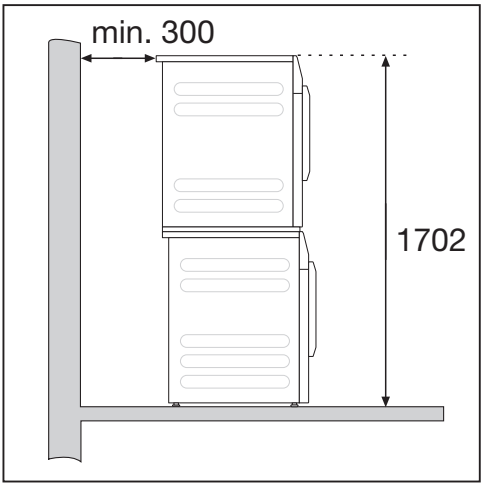

A stacking kit* is required. This must be fitted by a Miele authorised technician.

* Miele accessory available to order

Transporting the tumble dryer to its installation site

⚠ Damage caused by incorrect transportation of the tumble dryer.
If the tumble dryer tips over, there is a danger of injury to people and damage to property.
Ensure that the tumble dryer is stable during transportation.

Transporting the tumble dryer

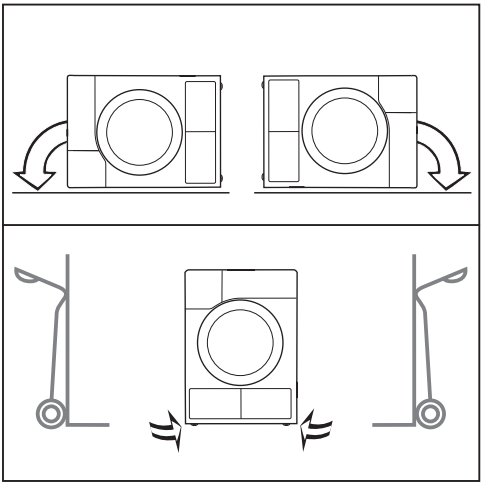

- If the tumble dryer is being transported on its side, it must be tipped onto its left or right side.
- If the tumble dryer is being transported upright, always transport it on a sack truck with its left or right side resting on the truck.

Transporting the tumble dryer to its installation site

⚠ Danger of injury due to unsecure lid.
The fixings at the back of the lid could break as a result of external forces. There is a danger of the lid being pulled off when carrying the machine.
Before carrying the machine, check that the lid is secure where it protrudes at the back of the machine.

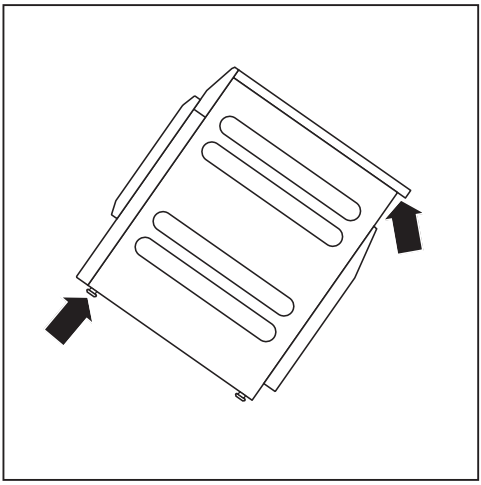

- Carry the tumble dryer by the front feet and by the lid where it protrudes at the back of the appliance.

Installation

Ensure that no closeable door, sliding door, or an oppositely hinged door is installed that would hinder the door of the tumble dryer being opened in any way.

Downtime after installation

⚠ Damage caused by switching the appliance on too soon.

This can damage the heat pump.

After setting up the tumble dryer, wait for at least one hour before switching it on.

Levelling the tumble dryer

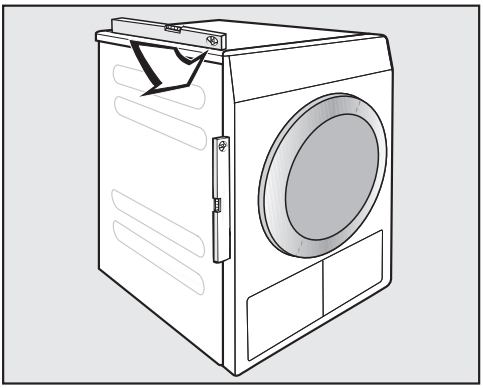

The appliance must stand perfectly level on all four feet to ensure safe and proper operation.

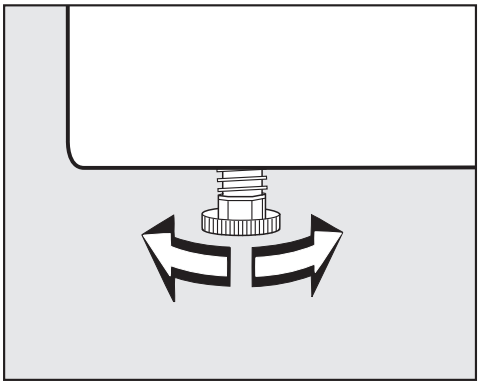

The screw feet can be adjusted to compensate for unevenness in the floor.

This tumble dryer is not suitable for building under.

Never block the ventilation slots on the tumble dryer. Do not block the gap between the bottom of the tumble dryer and the floor with plinth facings, deep pile carpet etc. This would hinder a sufficient flow of air to the tumble dryer.

Room ventilation

- Air drawn in for use in the drying process will be warm when it is expelled back into the room. It is therefore very important to ensure the room is adequately ventilated, particularly if the dryer is located in a small room.
- Make sure the room temperature is not too high. If there are other heat producing appliances in the room in which the dryer is located, make sure the room is well ventilated and switch the other appliances off, if possible.

Otherwise running times and energy consumption could be increased.

External control equipment

An optional accessory unit has to be purchased to set up a connection with external systems:

- XCI box communication module (e.g for peak load control units or payment systems)
- XCI-AD communication adapter (for payment systems only)

Payment systems

This tumble dryer can be fitted with a payment system (optional Miele accessory). In this case, a Miele Service technician must programme the relevant settings in the tumble dryer's electronics and connect the payment system.

Coins/tokens must be removed from the coin box regularly. Otherwise, the payment system will become blocked.

Hose for external drainage of condensed water

The condensed water is pumped away through the drain hose which is located at the back of the dryer.

Laying the drain hose

⚠ Damage to the drain hose due to incorrect handling.
The drain hose can suffer damage and leak.
Do not pull on the drain hose and do not stretch it or allow it to become kinked.

Tip: Use the bow-shaped guide to prevent the drain hose from becoming kinked.

Drain hose length: 1400 mm
Delivery head: 1000 mm

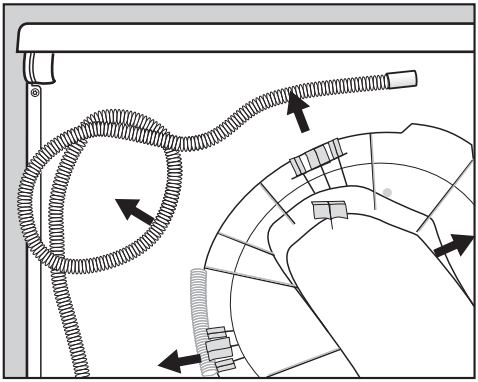

■ Pull the drain hose out of the clips.

Drainage options

Tip: Follow the warnings regarding leaking or returning water if you select one of the following connection options.

- Directed into a sink or basin
- Directed into a floor gully
- Connected directly to a sink drain outlet
- Connection to a drainage system already in use by another appliance, e.g. a dishwasher or washing machine

⚠ Water damage.
Should the end of the hose come loose, overflowing water can cause damage.
Secure the drain hose carefully (e.g. by tying it) to make sure it cannot slip.

⚠ Damage caused by condensation back-flow.
Water could flow back into the tumble dryer or be drawn into it. The tumble dryer will sustain damage and water will leak out.
The non-return valve should be used if the end of the hose is immersed in water, or if other water connections are installed.

Example: Connected directly to a sink drain outlet

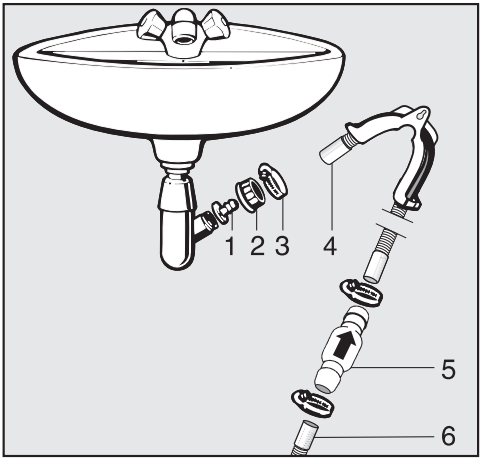

1. Adapter
2. Nut
3. Hose clip
4. Hose extension
5. Non-return valve and hose clips
6. Tumble dryer drain hose

- Install adapter **1** to the sink drain outlet using nut **2**.
  The nut is usually fitted with a washer which must be removed.
- Attach the end of the hose **4** to adapter **1**.
- Use a screwdriver to tighten hose clip **3** up close to the nut.
- Insert the non-return valve **5** into the tumble dryer's drain hose **6**.

Install the non-return valve **5** so that the arrow points in the direction of flow (towards the sink).

- Secure the non-return valve using hose clips.

Electrical connection

This description applies to tumble dryers both with and without a mains plug.

The following applies to tumble dryers with a mains plug:

- This tumble dryer is supplied with a mains cable and plug ready for connection.
- The electrical socket must be easily accessible so that the tumble dryer can be disconnected from the electricity supply.

⚠ Damage caused by incorrect supply voltage.
The data plate indicates the nominal power consumption and the appropriate fuse rating.
Compare the specifications on the data plate with those of the mains electricity supply and make sure that they match.

The electrical system must comply with local and national safety regulations (BS 7671 in the UK). We recommend the use of a suitable RCD ⊡.

The tumble dryer may only be connected to a permanent electrical system that conforms to the national and local codes and regulations.

The tumble dryer should never be connected by an extension cable, e.g. power strips, to avoid the risk of fire.

If the machine is hard wired, a dual circuit breaker must be provided on-site. When switched off there must be an all-pole contact gap of at least 3 mm in the isolator switch (including miniature circuit breaker, switch, fuses and relays according to IEC/EN 60947). This connection process must be performed by a qualified electrician.

The plug connector or isolator switch should be easily accessible at all times.

⚠ Risk of electric shock from mains voltage.
If the tumble dryer is disconnected from the mains, protective measures must be taken to ensure that the point of disconnection cannot accidentally be switched on again.
Make sure the isolator is lockable or the point of disconnection is monitored at all times.

New connections, modifications to the system, or servicing of the earthing conductor, including determining the correct fuse amperage, must be carried out by a qualified electrician, as they are familiar with the pertinent regulations and the specific requirements of the electric utility company.

The tumble dryer must not be connected to devices such as timers which would switch it off automatically.

Single phase AC 230 V – country variant 230V 25A

This device is intended for connection to a power supply system where the maximum value of external phase neutral loop impedance Zmax of 0.38 Ohms at the point of distributor supply connection is not exceeded.

The user has to ensure that this device is connected only to a power supply system which fulfils the requirement above. If in doubt, please ask your electrical distributor for actual impedance value.

	Load size[1]	Final spin speed in washing machine	Residual moisture	Energy	Duration
	kg	rpm	%	kWh	min
Cottons Eco	7.0	1000	60	1.70	92
Normal[2]	3.5	1000	60	1.01	59
Cottons Normal	7.0	1200	53	1.50	74
	7.0	1400	50	1.42	70
	7.0	1550	48	1.36	67
	7.0	1600	44	1.25	61
Cottons Hand iron	7.0	1000	60	1.26	68
	7.0	1200	53	1.23	61
	7.0	1400	50	1.14	57
	7.0	1600	44	0.96	48
Minimum iron Normal	4.0	1.200	40	0.66	40
Automatic plus Normal	5.0	800	50	1.45	85
Shirts Normal	2.0	600	60	0.70	45
Denim Normal	3.5	900	60	1.55	90
Woollens	2.0	1000	50	0.30	20
Smoothing	1.0	1000	50	0.55	35
Express Normal	4.0	1000	60	1.20	70

[1] Weight of dry laundry

[2] Test programme in accordance with Regulation 392/2012/EU for energy labelling, measured in accordance with EN 61121.

All data was calculated using EN 61121 unless otherwise stated.

Consumption data can vary from the nominal values given above depending on the size of the load, types of textiles, residual moisture levels after spinning and fluctuations in the electricity supply, or when water hardness levels and extra options differ from specified values.

Technical data

Height	850 mm
Width	596 mm
Width (only for machines with a stainless steel lid)	605 mm
Depth	777 mm
Depth with door open	1191 mm
Weight	72 kg
Drum volume	130 l
Load size	7 kg (weight of dry laundry)
Hose length	1400 mm
Length of connection cable	2000 mm
Supply voltage	See data plate on back of machine
Rated load	See data plate on back of machine
Fuse rating	See data plate on back of machine
Test certifications awarded	See data plate on back of machine
LEDs	Class 1
Designation of refrigerant	R134a
Refrigerant quantity	0.61 kg
Refrigerant global warming potential	1430 kg CO_2 e
Appliance global warming potential	872 kg CO_2 e
Max. floor load during operation	925 N
Product safety standard	EN 50570, EN 60335
A-rated sound emissions L_{pA} in accordance with EN ISO 11204/11203	< 70 dB re 20 µPa
Frequency band	2.4000 GHz – 2.4835 GHz
Maximum transmission power	< 100 mW

Data sheet for household tumble driers

In acc. with delegated regulation (EU) No. 392/2012

MIELE	
Model name/identifier	PDR 307 HP CC
Rated capacity[1]	7,0 kg
Type of tumble drier (Air-vented / condenser)	- / ●
Energy efficiency class	
A+++ (most efficient) to D (least efficient)	A++
Weighted annual energy consumption (AE_c)[2]	212 kWh/year
Tumble drier (Automatic / non-automatic)	● / -
Energy consumption of the standard cotton programme	
Energy consumption at full load	1,70 kWh
Energy consumption at partial load	1,01 kWh
Weighted power consumption in off-mode (P_o)	W
Weighted power consumption in the left-on mode (P_l)	W
Duration of the 'left-on' mode (T_l)[3]	min
Standard programme to which the information in the label and the fiche relates[4]	Cottons with arrow
Programme time of the 'standard cotton programme'	
Weighted programme time	73 min
Programme time at full load	92 min
Programme time at partial load	59 min
Condensation efficiency class[5]	
A (most efficient) to G (least efficient)	A
Weighted condensation efficiency for the 'standard cotton programme' at full and partial load	91 %
Average condensation efficiency of the 'standard cotton programme' at full load	92 %
Average condensation efficiency of the 'standard cotton programme' at partial load	91 %
Sound power level (L_{WA})[6]	67 dB(A) re 1 pW
Built-in	-

● Yes, standard feature

[1] In kg of cotton laundry for the standard cotton programme at full load.

[2] based on 160 drying cycles of the standard cotton programme at full and partial load, and the consumption of the low-power modes. Actual energy consumption per cycle will depend on how the appliance is used.

[3] If the household tumble drier is equipped with a power management system.

[4] This programme is suitable for drying normal wet cotton laundry and is the most efficient programme in terms of energy consumption for cotton.

[5] If the household tumble drier is a condenser tumble drier.

[6] For the standard cotton programme at full load.

EU Conformity declaration

Miele hereby declares that this heat-pump tumble dryer complies with Directive 2014/53/EU.

The complete text of the EU declaration of conformity is available from one of the following internet addresses:

- Products, Download from www.miele.co.uk
- For service, information, operating instructions etc: go to www.miele.co.uk/domestic/customer-information-385.htm and enter the name of the product or the serial number

UK Conformity declaration

Miele hereby declares that this heat-pump tumble dryer complies with UK Radio Equipment Regulations 2017, as amended.

The complete text of the UK declaration of conformity is available from one of the following internet addresses:

- Products, Download from www.miele.co.uk
- For service, information, operating instructions etc: go to www.miele.co.uk and enter the name of the product or the serial number

Opening Supervisor level

The settings menu in the Supervisor level is locked against unauthorised access. The menu can be unlocked with a code.

Access via code

The supervisor level is accessed using a code.

Factory default: the code is **000**.

Change code

You can alter the supervisor level access code to protect the tumble dryer from unauthorised access.

Carefully enter a new code.
Please inform Miele Service if you have forgotten your new code. Miele Service will have to reset the code.
Make a note of your new code and store it in a safe place.

Demo programme

In showrooms, a demo programme can be started with a simulation.

The programme does not start. The operational sequence is simply a simulation.

Tip: The demo programme will only be available if a drying programme lasting more than 1 hour has not been carried out. After this, the demo programme will not be available.

- Factory default: Off
- On

Opening the supervisor level

■ Touch the ⚙🔒 sensor control.

The ⚙🔒 symbol appears in the display if you turn the programme selector to a programme.

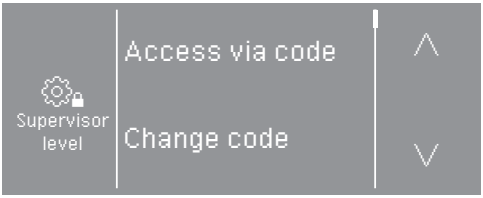

The following options are available for selection: Access via code, Change code, Demo programme.

■ Select Access via code.

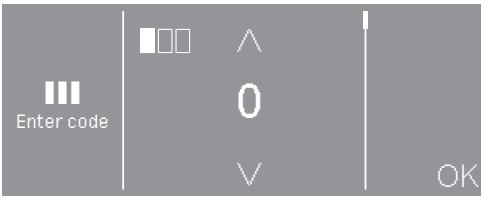

■ Enter the individual numbers and confirm each selection with OK.

The supervisor level settings are opened.

■ Select the desired setting.

Exiting the supervisor level

■ Touch the ⮌ sensor control or switch off the tumble dryer.

Language

The display can be set to appear in one of several different languages. To select the language you want, go to the *Languages* sub-menu.

You can change the language as follows:

- Permanently using the supervisor level (= “Supervisor language”).
- For the duration of the current programme only using the sensor control. The supervisor language is displayed again at the end of the programme.

Brightness

The brightness of the display can be set in intervals of ten from 10 % to 100 %.

Factory default: 70 %

Clock display

After selecting the clock format, you can set the time of day.

Clock format

- Factory default: 24-hour display
- 12-hour display
- Clock off

Set

- The time can be set.

Finish tone volume

The volume can be changed for the audible signal that sounds at the end of the programme.

It can be set to one of 7 different levels or switched off altogether.

Factory default: Off

Keypad tone volume

An audible signal can also be activated that sounds when the sensor controls are pressed; the volume of this signal can be adjusted.

It can be set to one of 7 different levels or switched off altogether.

Factory default: normal

Welcome tone volume

The volume of the switch-on signal tone can be changed.

It can be set to one of 7 different levels or switched off altogether.

Factory default: Off

Fault alarm

The audible signal that indicates an error can be switched off.

- Factory default: On
- Off

Anti-crease

At the end of the programme, the drum will continue to rotate at intervals if the laundry is not removed immediately.

Changing this setting leads to increased energy consumption.

The setting (⁂) can be switched off or a time between 1 and 12 hours can be selected.

Factory default: Off

Further cooling

Before the end of the programme, the temperature of the dried laundry is monitored and the cooling phase at the end of the programme is extended if necessary.

Changing this setting leads to increased energy consumption.

- Factory default: Off
- On

Cooling down temperature

The laundry will be cooled down automatically before the end of the programme. The automatic cooling-down phase which takes place before the end of a programme can be set at a cooler level for all programmes. This means that the cooling phase is extended.

Changing this setting leads to increased energy consumption.

The setting can be changed from 40 °C–55 °C.

Factory default: 55 °C

“Display” switch-off status

To save energy, the display goes out and the *Start*/*Stop* button flashes slowly.

Changing this setting leads to increased energy consumption.

- On after 10 min, not in current programme (factory default)
  The display will remain on during the programme sequence but will go out 10 minutes after the end of the programme.
- On after 10 min
  The display will go out after 10 minutes.

Delay start

The type of time input for the delay start function can be changed or switched off.

- Off
  The delay start function is not available for selection.
- End of programme (factory default)
  With the delay start function, you specify at what time the programme should end.
- Beginning of programme
  With the delay start function, you specify at what time the programme should begin.
- Time until start
  With the delay start function, you specify after how many hours a programme should begin.

Programme name

When selecting a standard programme, the name of the selected drying is shown in the display.

- Factory default: on
  When a programme is selected, the programme name is displayed for a few seconds before the display shows the main menu.
- Off
  The main menu is displayed immediately.

Visibility parameters

Various parameters are offered/displayed when a programme is selected. You can decide which parameters should not be displayed. These parameters can then not be edited during programme selection.

- Residual moisture
- Duration
- Gentle tumble

Drying levels Cottons

Drying level Minimum iron

You can alter the drying levels for the *Cottons and Minimum iron* programmes.

Changing this setting leads to increased energy consumption.

It can be set to one of 7 different levels.

Factory default: normal

Drying level Machine iron

The *Machine iron* drying level in the *Cottons* programme can be individually adapted.

Changing this setting leads to increased energy consumption.

You can change the residual moisture in this programme to one of 11 levels from 16 % (more dry) to 26 % (more moist).

Factory default: 20 %

Clean the airways

The tumble dryer's electronics calculate the degree at which fluff or detergent residue in the fluff filters and air ducts are impairing performance. A message to check the contamination appears. You can decide at what level of fluff this reminder should be emitted.

You can adjust this reminder: Clean out airways

- Off
  The reminder does not appear. However, if there is a very severe blockage in the ducting, the programme will be cancelled and the reminder will appear in the display regardless of this option.
- Heavy
  The reminder only appears when there is a heavy build-up of fluff.
- Factory default: normal
- Sensitive
  The reminder appears when there is only a small build-up of fluff.

COM mod. selection

This tumble dryer is equipped with an integrated WiFi module.

- Off
- Internal module (factory default)
  The internal WiFi module is used.

Availability of Miele digital products

The ability of Miele digital products depends on the availability of the services in your country.

The different services are not available in all countries.

For information about availability, please visit www.miele.com.

WiFi / LAN

Control the networking of your tumble dryer.

- Setup
  This message only appears if the tumble dryer has not yet been connected to a WiFi network.
- Deactivate (visible when the network is activated)
  The network remains set up; the WiFi function is switched off.
- Activate (visible when the network is deactivated)
  The WiFi function is reactivated.
- Connection status (visible when the network is activated)
  The following values are displayed:
  – The quality of WiFi reception
  – The network name
  – The IP address
- Reset (visible when set up)
  Resets the WiFi login (network) to immediately re-establish a new connection.
- Reset (visible if already set up)

  The network is no longer set up. A new connection has to be established in order to use the network again.
  – The WiFi is switched off
  – The WiFi connection will be reset to the factory default setting

WiFi setup

There are 2 possible connection methods.

<u>WPS</u>

■ Activate the WPS function on your router within 2 minutes.

Tip: If the connection has not been set up when the timeout has finished counting down, repeat the process.

<u>Soft AP</u>

■ Activate the function with the Miele app on your smart device within 10 minutes.

Tip: The app will guide you through the remaining steps.

Remote

Operating data relating to the tumble dryer (e.g. fault messages or notifications) is communicated externally.

- Factory default: On
- Off

Remote update

The RemoteUpdate function is used for updating the software in your tumble dryer.

Factory default: on

If you do not install a RemoteUpdate, you can continue to use your tumble dryer in the usual way. However, Miele recommends installing remote updates.

Activation

The RemoteUpdate menu option is only displayed and can only be selected if you have added your tumble dryer to your WiFi network.

Miele's RemoteUpdate function can only be used if the tumble dryer is connected to a WiFi network and you have an account in the Miele Professional app. The tumble dryer must be registered in the app.

See the Miele Professional app for terms and conditions of use.

Some software updates can only be carried out by Miele Service.

Running a RemoteUpdate

If a RemoteUpdate is available for your washing machine, it will be displayed automatically when the Operator level is open.

You can choose to start the RemoteUpdate immediately or wait until later. If you select "Start later", the prompt to run the RemoteUpdate will be displayed again the next time you switch on your washing machine.

The RemoteUpdate can take a few minutes.

Please note the following information about the RemoteUpdate function:

- You will only receive a message when a RemoteUpdate is available.
- Once a RemoteUpdate has been installed, it cannot be undone.
- Do not switch off the tumble dryer during a RemoteUpdate. Otherwise, the RemoteUpdate will be aborted and will not be installed.

Legal information

Open source licences

You can view information here.

Copyrights and licences for operator and control software

Miele uses their own and third party software which is not subject to any so-called Open Source Licence for the operation and control of the appliance. This software/these software components are protected by copyright. The copyright powers of Miele and third parties have to be respected.

Furthermore, this appliance contains software components which are distributed under Open Source licence conditions. Please refer to the menu item Settings | Appliance parameters | Legal information | Open source licences in the appliance for the Open Source components contained therein, together with the corresponding copyright notices, copies of the licencing conditions valid at the time, and any further information. The liability and warranty provisions of the Open Source licence terms and conditions as stated therein apply only in relation to the respective rights holders.

Payment system

The XCI-AD or XCI box accessory unit is required to connect a payment system.

Setting for payment systems

If you wish to change the settings after the commissioning process, please contact Miele Service.

You would like to connect a payment system.

- No payment system

  The next settings are skipped and initial commissioning can be completed.

- Programme operation

  The machine is operated using a coin box. The user purchases a wash programme.

- Timed operation

  The tumble dryer is coin-operated using a time meter. The user purchases a time-controlled programme.

- Timed operation with pulse counter

  For payment systems where the usage time is increased each time a coin is inserted.

Feedback signal to pay system

Setting the feedback signal for the coin box.

- Factory default: Off
- End of programme

  The feedback signal is sent at the end of the programme.

- Release of the start button

  The feedback signal is sent when the start button is released.

- Start and end of programme

  The feedback signal is sent at the start and end of the programme.

- Programme running

  The feedback signal is sent constantly between the start and end of the programme.

- Process air temperature

  The feedback signal is sent dependent on the temperature if the temperature of the process air is equal to or higher than the set temperature.

Payment system lock

To avoid tampering, a programme lock can be set up in programme operation. If the lock is applied, the programme is interrupted and payment credit is lost as soon as the door is opened.

The time for the lock to be applied can be adjusted to enable laundry to be added.

- Factory default: off
- As soon as the programme starts
- 1–5 minutes after the start of the programme

Delete paid signal

The “Paid” signal in coin box mode can be applied until the end of the programme or discarded if the programme is not started after 5 minutes.

- Factory default: Off
- On

Debounce time

In coin mode, the debounce time for the minimum payment signal that must be applied can be adjusted.

- Factory setting: Short

  For coin boxes where the falling coin generates the paid pulse.
- Long

  For central control units on a 230 V basis.

Payment system overriding time

Setting the transition signal for the coin box. Security time margin to prevent the coin box being tampered with.

The transition time can be adjusted in 15-minute increments between 30–240 minutes or switched off.

If the programme does not end within the transition period, the setting in the coin box is reset. The programme is cancelled.

Factory default: 180 minutes

Duration Cool air

The running time can be adjusted.

A time of between 10 and 120 minutes can be set in 5-minute increments.

Factory default: 120 minutes

Duration Warm air

The running time can be adjusted.

A time of between 20 and 120 minutes can be set in 5-minute increments.

Factory default: 60 minutes

FOC programmes

In coin mode, you can decide whether the *Timed drying cool air* programme can be used for free.

- Factory default: Off
- On

United Kingdom
Miele Co. Ltd., Fairacres, Marcham Road
Abingdon, Oxon, OX14 1TW
Professional Sales, Tel: 0845 365 6608
E-mail: professional@miele.co.uk
Internet: www.miele.co.uk/professional

Australia
Miele Australia Pty. Ltd.
ACN 005 635 398, ABN 96 005 635 398
Level 4, 141 Camberwell Road, Hawthorn East, VIC 3123
Tel: 1300 731 411
Internet: www.miele.com.au/professional
E-mail: sales@miele-professional.com.au

China Mainland
Miele Electrical Appliances Co., Ltd.
1-3 Floor, No. 82 Shi Men Yi Road
Jing' an District, 200040 Shanghai, PRC
Tel: +86 21 6157 3500, Fax: +86 21 6157 3511
E-mail: info@miele.cn, Internet: www.miele.cn

Hong Kong, China
Miele (Hong Kong) Ltd.
41/F - 4101, Manhattan Place
23 Wang Tai Road, Kowloon Bay, Hong Kong
Tel: (852) 2610 1025, Fax: (852) 3579 1404
Email: customerservices@miele.com.hk
Website: www.miele.hk

India
Miele India Pvt. Ltd.
1st Floor, Copia Corporate Suites,
Commercial Plot 9, Mathura Road, Jasola,
New Delhi - 110025
E-mail: customercare@miele.in, Website: www.miele.in

Ireland
Miele Ireland Ltd.
2024 Bianconi Ave., Citywest Business Campus, Dublin 24
Tel: (01) 461 07 10, Fax: (01) 461 07 97
E-Mail: info@miele.ie, Internet: www.miele.ie

Malaysia
Miele Sdn Bhd
Suite 12-2, Level 12
Menara Sapura Kencana Petroleum
Solaris Dutamas No. 1, Jalan Dutamas 1
50480 Kuala Lumpur, Malaysia
Phone: +603-6209-0288
Fax: +603-6205-3768

New Zealand
Miele New Zealand Limited
IRD 98 463 631
8 College Hill
Freemans Bay, Auckland 1011, NZ
Tel: 0800 464 353
Internet: www.miele.com.au/professional
E-mail: sales@miele-professional.com.au

Singapore
Miele Pte. Ltd.
29 Media Circle, #11-04 ALICE@Mediapolis
Singapore 138565
Tel: +65 6735 1191, Fax: +65 6735 1161
E-Mail: info@miele.com.sg
Internet: www.miele.sg

South Africa
Miele (Pty) Ltd
63 Peter Place, Bryanston 2194
P.O. Box 69434, Bryanston 2021
Tel: (011) 875 9000, Fax: (011) 875 9035
E-mail: info@miele.co.za
Internet: www.miele.co.za

United Arab Emirates
Miele Appliances Ltd.
Showroom 1, Eiffel 1 Building
Sheikh Zayed Road, Umm Al Sheif
P.O. Box 114782 - Dubai
Tel. +971 4 3044 999, Fax. +971 4 3418 852
800-MIELE (64353)
E-Mail: info@miele.ae, Website: www.miele.ae

Manufacturer: Miele & Cie. KG
Carl-Miele-Straße 29, 33332 Gütersloh, Germany

Miele

PDR 307 HP CC

en-GB

M.-Nr. 12 032 520 / 02